INSTALLATION INSTRUCTIONS
4-WHEEL DOLLY KIT

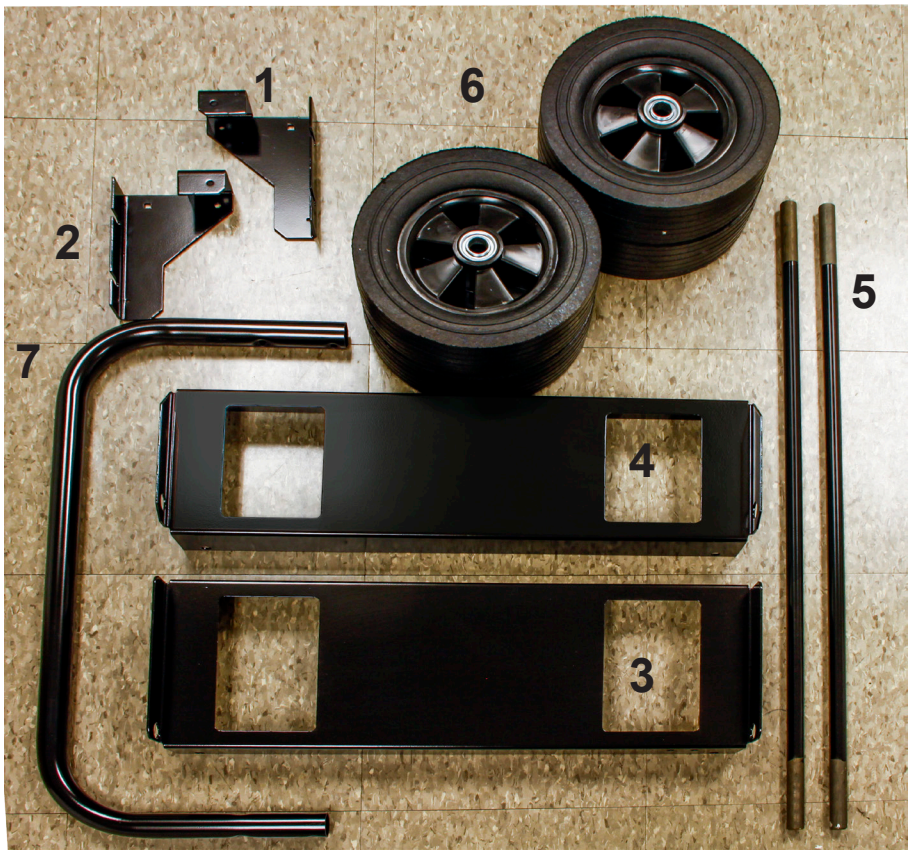

COMPONENT LIST			
REF. #	PART #	DESCRIPTION	QTY.
1	300066-26	Left Handle Support	1
2	300066-27	Right Handle Support	1
3	15775-025	Front (Engine) Axle Bracket	1
4	15775-006	Rear (Gen-end) Axle Bracket	1
5	64326-020	Axle	2
6 SEE NOTE BELOW	43657-008	Hard Rubber Wheel & Tire	4
7	61857-007	Handle	1
Not Pictured	16199-124	Parts Bag	1

NOTE: Pneumatic Wheel & Tire. 43657-003 (optional)

STEP 1

- Open hardware bag and separate components.

FASTENERS & MISC. COMPONENTS
(not shown in actual size)

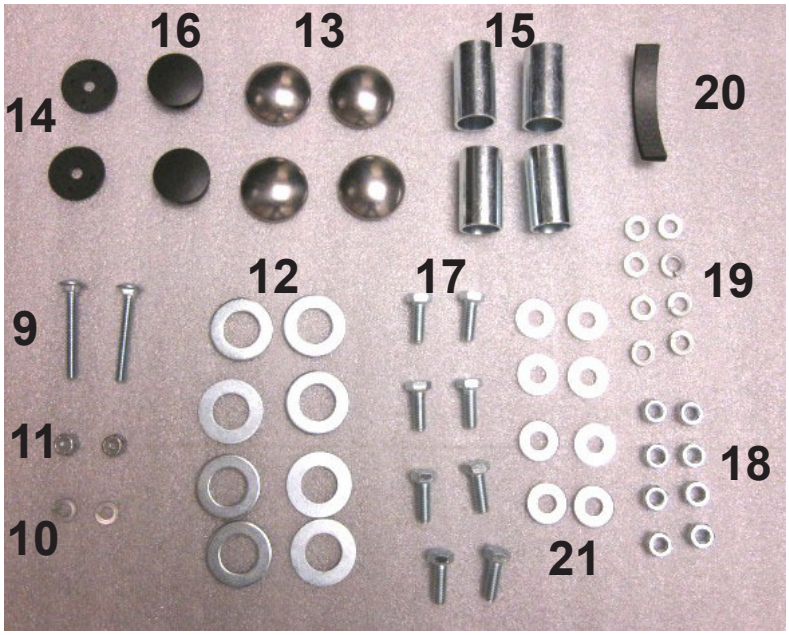

HARDWARE & FASTENER LIST			
REF #	PART #	DESCRIPTION	QTY
9	56842-005	1/4" X 2" Carriage Bolt	2
10	479-000	1/4" Split Lock Washer	2
11	47517-000	1/4" Nylock Nut	2
12	1178-000	Flat Washer	8
13	64327-000	Hub Cap	4
14	96286-006	Nylon Flat Washer	2
15	64688-007	Spacer	4
16	93402-002	Hole Plug	2
17	465-000	5/16" X 7/8" Bolt	8
18	458-000	5/16" Nut	8
19	480-000	5/16" Split Lock Washer	8
20	62912-000	Foam Strip	1
21	526-000	Flat Washer	8

STEP 2

- Cut the foam strip (ref. 20) in half using a scissors. Apply to the underside of the handle supports (ref. 1 & 2). Insert hole plugs (ref. 16) into the ends of the handle.
- Bolt left and right handle supports (ref. 1 & 2) to the cradle using hardware on the cradle. Attach handle (ref. 7) using hardware (ref. 9, 10, 11, 14). Do not over-tighten so that the handle will move freely.

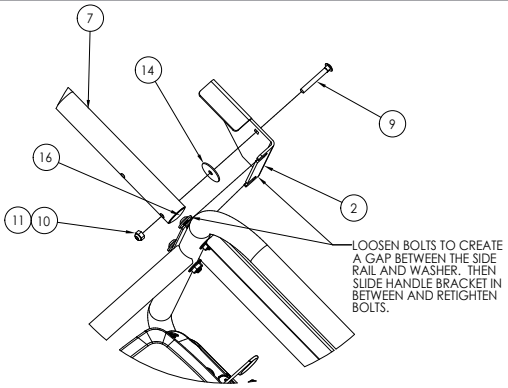

STEP 3

- Remove the generator from the pallet and block generator up 8 to 10 inches to gain access to the bottom of the cradle assembly. A lifting jack or hoist may also be used if available.

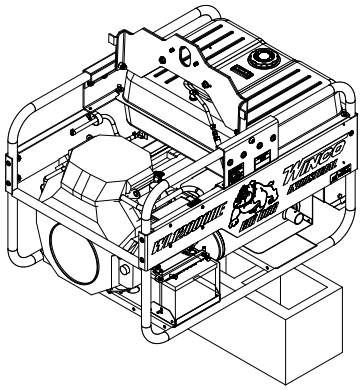

STEP 4

- Bolt Front Axle Bracket (ref.3) on the engine end of the cradle and Rear Axle Bracket (ref.4) to the generator end of the cradle using hardware (ref. 17, 21, 18, 19). Make sure the axle brackets are on the inside of the cradle cross-members. The flat washers (ref. 21) go onto the bolts (ref. 17) first.

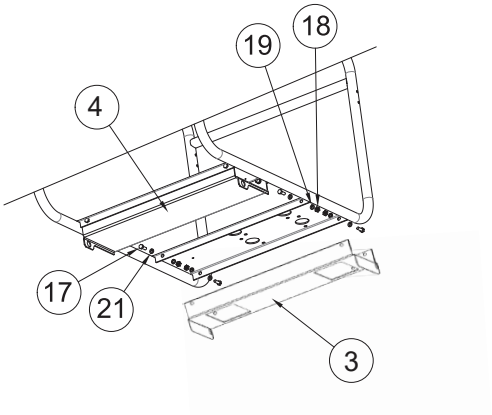

BRAKE ASSEMBLY

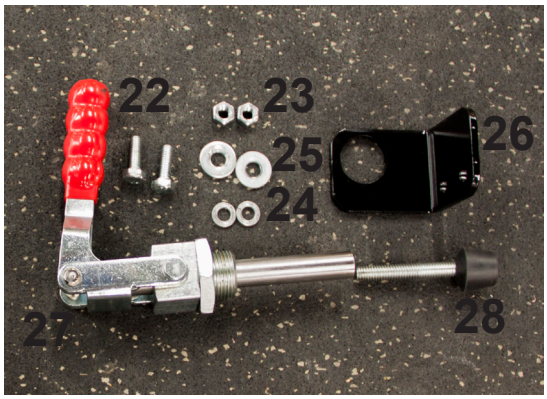

HARDWARE LIST			
REF #	PART #	DESCRIPTION	QTY
22	465-000	5/16” X 7/8” Bolt	2
23	458-000	5/16” Nut	2
24	480-000	5/16” Split Lock Washer	2
25	526-000	Flat Washer	2
26	15775-023	Bracket	1
27	15775-100	Brake Clamp	1
28	64657-100	Spindle	1

STEP 5

- Bolt the bracket for the brake clamp to the dolly kit axle bracket using the provided hardware.
- Use nut on brake clamp to firmly secure the brake clamp to the bracket.
- Screw in the spindle all the way into the brake clamp.
- The brake is engaged when the spindle is between the spokes of the tire.

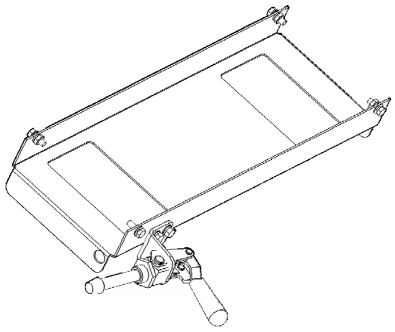

STEP 6

- Place spacer (ref. 15), washer (ref. 12), wheel (ref. 6), washer (ref. 12) on the axle. Then tab the hubcap (ref. 13) on the axle. Then slide assembly through rear axle bracket. (ref. 3) Place other spacer, washer, wheel, washer and hubcap on axle.
- Slide washer (ref. 12), wheel (ref. 6), washer (ref. 12) and spacer (ref. 15) onto axle (ref. 5). Slide the assembly through the front axle bracket (ref. 4) and lower the unit to the ground. Place other spacer, washer, wheel and washer on axle. Tap the last hubcap on the axle. NOTE: Do not tap too hard as you may dent the hubcaps.

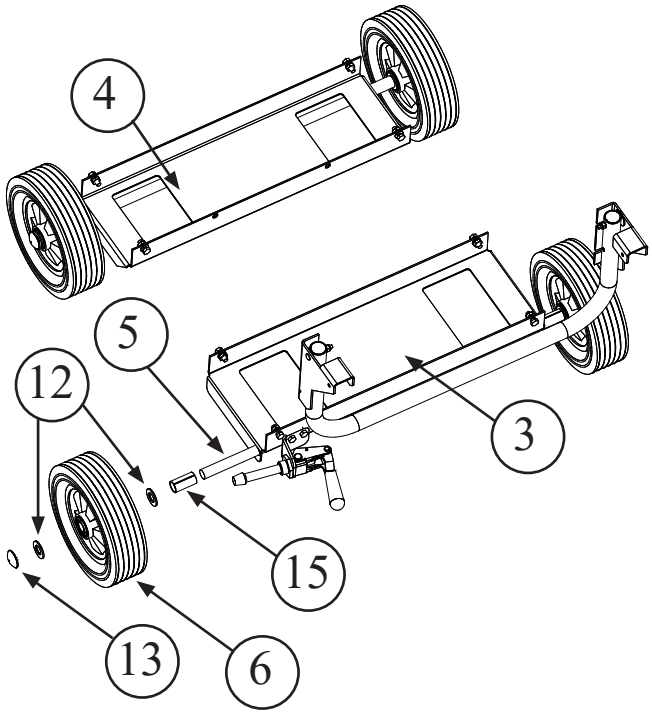

Winco Inc.
Service Dept.
507-357-6831