# M106470B

**ITEM NUMBER:** 106470, 106471
**SERIAL NUMBER:** _____

# Owner's Manual

Instructions for Assembly, Testing, Operation, Servicing, and Storage

**Water Pump**: Outdoor agricultural product used for general purpose water pumping and field irrigation.**

**⚠ WARNING**

**READ and UNDERSTAND the Owner's Manual completely before using this water pump**. Assemble, test, and use only in accordance with the Owner's Manual instructions.

**WEAR personal protective gear when filling, using, cleaning, and servicing the water pump.**

**DO NOT START water pump until ready to use** in order to avoid unintentional spray release.

**Improper use of the water pump could result in serious injury or illness to the operator or nearby persons/animals, or could cause damage to the environment.**

****** This water pump is recommended for use in pumping/spraying non-flammable liquids such as water.
Solids capacity will depend on model.

**Any Questions, Comments, Problems, or Parts Orders**
***Call NorthStar Product Support 1-800-270-0810***

# Hazard Signal Word Definitions

| | |
|---|---|
| ⚠ | This is the safety alert symbol. It is used to alert you to potential personal injury hazards. Obey all safety messages that follow this symbol to avoid possible injury or death. |
| ⚠ DANGER | DANGER (red) indicates an imminently hazardous situation which, if not avoided, will result in death or serious injury. |
| ⚠ WARNING | WARNING (orange) indicates a potentially hazardous situation which, if not avoided, could result in death or serious injury. |
| ⚠ CAUTION | CAUTION (yellow) indicates a potentially hazardous situation which, if not avoided, may result in minor or moderate injury. |
| CAUTION | CAUTION (yellow) used without the safety alert symbol indicates a potentially hazardous situation which, if not avoided, may result in property damage. fig01453 |

# Table of Contents

**About Your Water Pump** ..... 4

**Summary of Important Safety Information** ..... 5

During Assembly
During Operation
During Storage / Troubleshooting

**Warning Label Locations** ..... 6

**Unpacking** ..... 7

**Assembly** ..... 8

**Machine Components** ..... 9

**Operation**

**Operation - Preparing the Water Pump for Each Use**

Step One: Inspect/Repair ..... 10
Step Two: Fueling ..... 12
Step Three: Attach a suction strainer ..... 13
Step Four: Place the water pump ..... 13

**Operation - Using the Water Pump** ..... 14

**Storage** ..... 15

**Troubleshooting** ..... 16

**Specifications** ..... 17

**Water Pump Exploded View** ..... 18

**782592 Pump Exploded View** ..... 19

**782593 Pump Exploded View** ..... 20

**Limited Warranty** ..... 21

# About Your Water Pump

## Thank you for purchasing your NorthStar water pump!

### About Your Water Pump

This water pump is a machine designed for outdoor, agricultural, general purpose water pumping and field irrigation applications of clear water only.

The technical specifications for your water pump are provided in the "Specifications" section of this manual.

Follow all safety precautions presented throughout this manual. A summary of important safety information can be found at the beginning of the manual.

**Contact NorthStar Product Support at 1-800-270-0810 for any questions about the appropriate use of this water pump and/or optional accessories.**

### Warranty Registration:

Please fill in the warranty registration information and have it on hand when you call in on a warranty claim.

## Attention: All Rental Companies and Private Owners who loan this equipment to others!

*All persons to whom you rent/loan this water pump must have access to and read this manual*. Keep this owner's manual with the water pump at all times and advise all persons who will operate the machine to read it. You must also provide personal instruction on how to safely operate the water pump and be available to answer any questions a renter/borrower might have.

# Summary of Important Safety Information

**⚠ WARNING**

Read and understand **this owner's manual** completely before using the water pump.

***Improper use of the water pump could result in serious injury or illness for the operator or nearby persons/animals, or cause damage to the environment.***

**LISTED BELOW is a summary of safety information of particular importance. See individual sections of this owner's manual for more details.**

## ---------- BEFORE OPERATION----------

- **Read manual.** Do not allow anyone to operate the water pump who has not read the Owner's Manual or has not been instructed on the safe use of the water pump.
- **Review safety rules**. Before starting this water pump, review the instructions for safe operation.
- **Know how to stop**. Be thoroughly familiar with all controls and with the proper use of the equipment. Know how to stop the water pump.

## ---------- DURING ASSEMBLY ----------

- **CHECK and TEST completed assembly** as directed in this manual. Serious injury could result from water leaks if water pump is improperly assembled.
- **DO NOT MODIFY water pump design.**

## ---------- DURING FUELING/REFUELING ----------

- **Fuel outdoors**. Fill fuel tank outdoors – never indoors. Gasoline vapors can ignite if they collect inside an enclosure. Explosion can result.
- **Use approved container**. Never pump fuel directly into engine at gas station. Static charge can build and ignite fuel. Use an UL approved fuel container to transfer gas to the engine.
- **Running / hot engine**. A running engine is hot enough to ignite fuel. Never add fuel or remove gas cap if engine is running or still hot. Stop the engine and allow it to cool, at least two minutes before adding fuel.
- **Heat / flames / sparks**. Stay away from sources of heat, flame, or sparks while adding fuel.
- **Don't overfill**. DO NOT overfill the gas tank.
- **Replace cap**. Replace gas cap securely before starting engine.
- **Spills**. Clean up fuel spills immediately. Move water pump away from spilled fuel on the ground. Wipe fuel off engine and wait 5 minutes for excess fuel to evaporate before starting engine. Gas soaked rags should be disposed of properly.
- **On skin / clothes**. If gasoline is spilled on your skin or clothes, change clothes and wash skin immediately.
- **Gasoline storage**. Store gasoline in a cool, dry place in an UL approved, tightly sealed container.

## ---------- DURING OPERATION ----------

- **INSPECT and PREPARE water pump before each use** as directed in this manual.
- **DO NOT USE flammable or corrosive chemicals** in the water pump.
- **DO NOT RUN** water pump while unattended.
- **FOLLOW INSTRUCTIONS for SAFELY FUELING/REFUELING THE ENGINE.** Gasoline is flammable and can explode. Always use caution when handling gasoline.
- **DO NOT START water pump until ready to use** in order to avoid unintentional release.
- **SEE Troubleshooting section of this manual before attempting any repairs**. Wear personal protective equipment and follow safety instructions.
- **Hot muffler.** If you are starting a warm engine, stay clear of muffler. It may still be hot enough to burn you.
- **Unattended**. Never leave the machine unattended while the engine is running.
- **Under the influence**. Never operate, or let anyone else operate, the water pump while under the influence of alcohol, drugs, or medication.
- **Adjusting/Repairing.** Turn off engine and remove spark plug cap before cleaning, inspecting, or servicing the water pump.
- **Carbon monoxide**. The running engine gives off carbon monoxide, a poisonous gas that can kill you. You CANNOT smell it, see it, or taste it. If you start to feel sick, dizzy, or weak while using the water pump, shut off the engine and get to fresh air RIGHT AWAY. See a doctor. You may have carbon monoxide poisoning.

# Summary of Important Safety Information

- **Other exhaust dangers**. Engine exhaust, some of its constituents, and certain vehicle components contain or emit chemicals known to the State of California to cause cancer, birth defects, or other reproductive harm. Avoid inhalation of exhaust.

## ---------- AFTER OPERATION ----------

- **Let engine cool before storing.** Let engine cool for at least five minutes before storing. A hot engine can be a fire hazard.
- **Storage location.** Store the water pump in a location away from sources of heat, open flames, sparks or pilot lights – such as water heaters, space heaters, furnaces, clothes dryers, or other gas appliances. Even if the water pump's gas tank is empty, residual gasoline vapors could ignite.
- **Gasoline storage.** Store extra gasoline in a cool, dry place in an UL approved, tightly sealed container. Gasoline vapors can ignite if they collect inside an enclosure.
- **Periodic maintenance.** Perform periodic maintenance as directed in this manual to keep the water pump in safe working condition.

## ---------- DURING STORAGE / TROUBLESHOOTING ----------

- **PREPARE THE WATER PUMP FOR STORAGE according to the instructions in this manual.**
- **SELECT a well-ventilated STORAGE AREA away from sources of heat, flame, or sparks.** Gasoline vapors can ignite and cause a fire.
- **READ and FOLLOW the safety rules for troubleshooting / servicing** the water pump.

# Warning Label Location

**⚠ WARNING**

**Fire/Explosion Hazard**

**Fuel is flammable and explosive. Exhaust is very hot.**

- -NEVER fuel a running or hot engine.
- -Ensure there are no fuel leaks before starting.
- -Keep sources of sparks and flames away.
- -Clean up fuel spills immediately.
- -Keep muffler at least 7 ft. from all combustible objects.
- -OPERATE ONLY with adequate cooling ventilation so engine does not overheat.
- -ALWAYS keep a fire extinguisher nearby.
- -Do not run water pump while unattended.

**⚠ DANGER**

**Using a water pump indoors CAN KILL YOU IN MINUTES.**

**Water pump exhaust contains carbon monoxide. This is a poison you cannot see or smell.**

Northern Tool + Equipment Co. 1-800-270-0810 www.NorthernTool.com Part No. 782641

**⚠ WARNING**

**DO NOT** open ***priming port plug*** if pump is hot! Water inside may be under pressure.

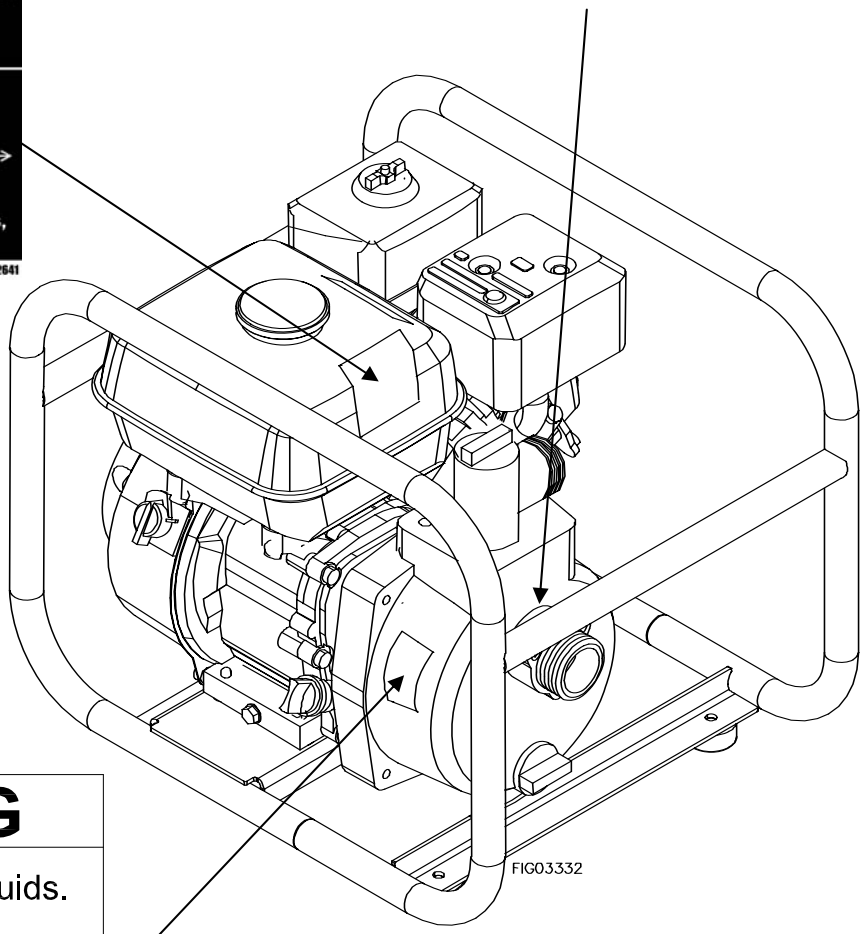


**⚠ WARNING**

- DO NOT pump flammable liquids.
- READ manual before use.
- Avoid other water pump hazards.
- Fully prime the pump and check all connections for leaks before starting engine.

©2009 Northern Tool + Equipment 800-270-0810 Part No. 781120

Call North Star Product Support at 1-800-270-0810 to order new labels.
Order Part No.
784261 – Warning, priming plug
782641 - Warning decal
781120 - Pump decal

# Unpacking

**Closely inspect all contents in the shipping carton.**

Note that some parts are shipped inside the manual bag.

- **If you have damaged components:** Contact the freight company that delivered the unit and file a claim.
- **If you have missing components:** Contact NorthStar Product Support at 1-800-270-0810.

**The following items are found in the manual bag.**

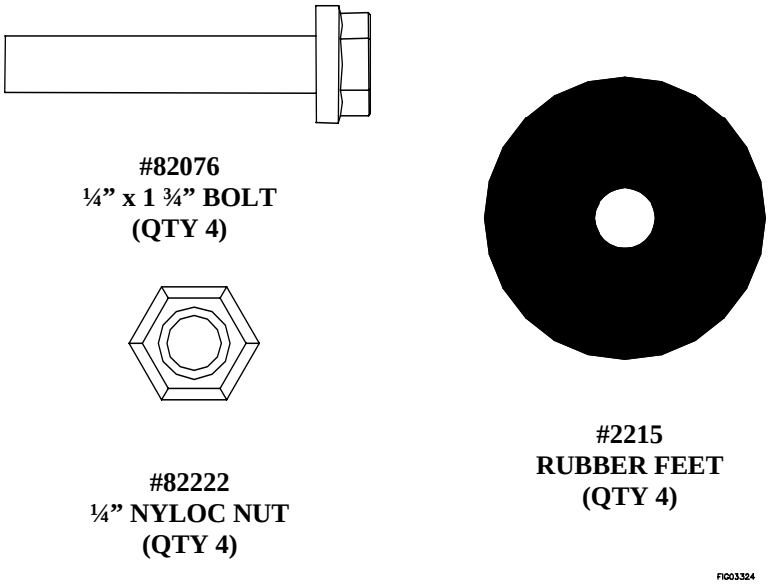

# Assembly

**Attach rubber feet to the base.**

1. Using a 3/8” and 7/16” socket, attach the rubber feet to the base with the bolt and nut.

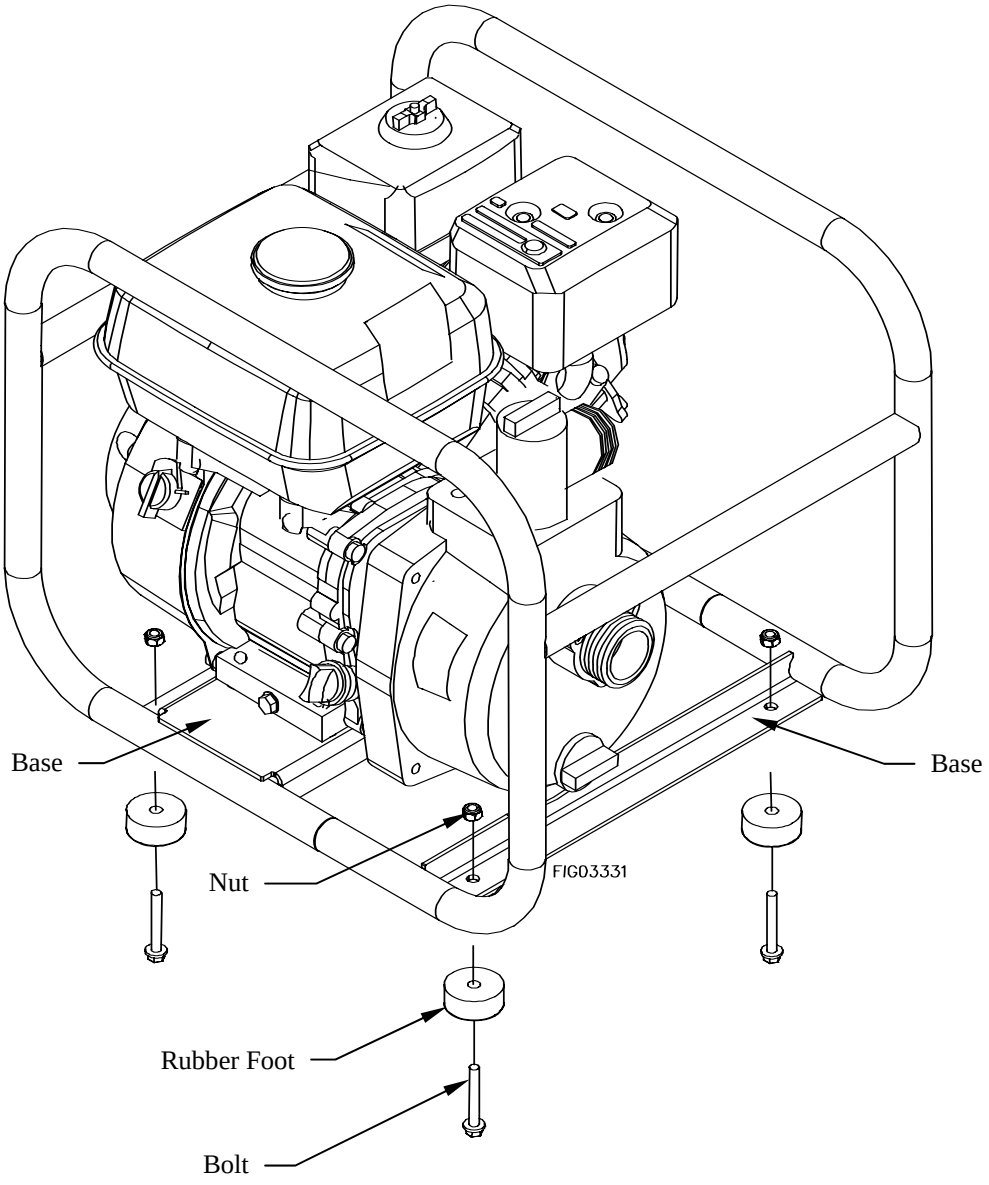

# Machine Components

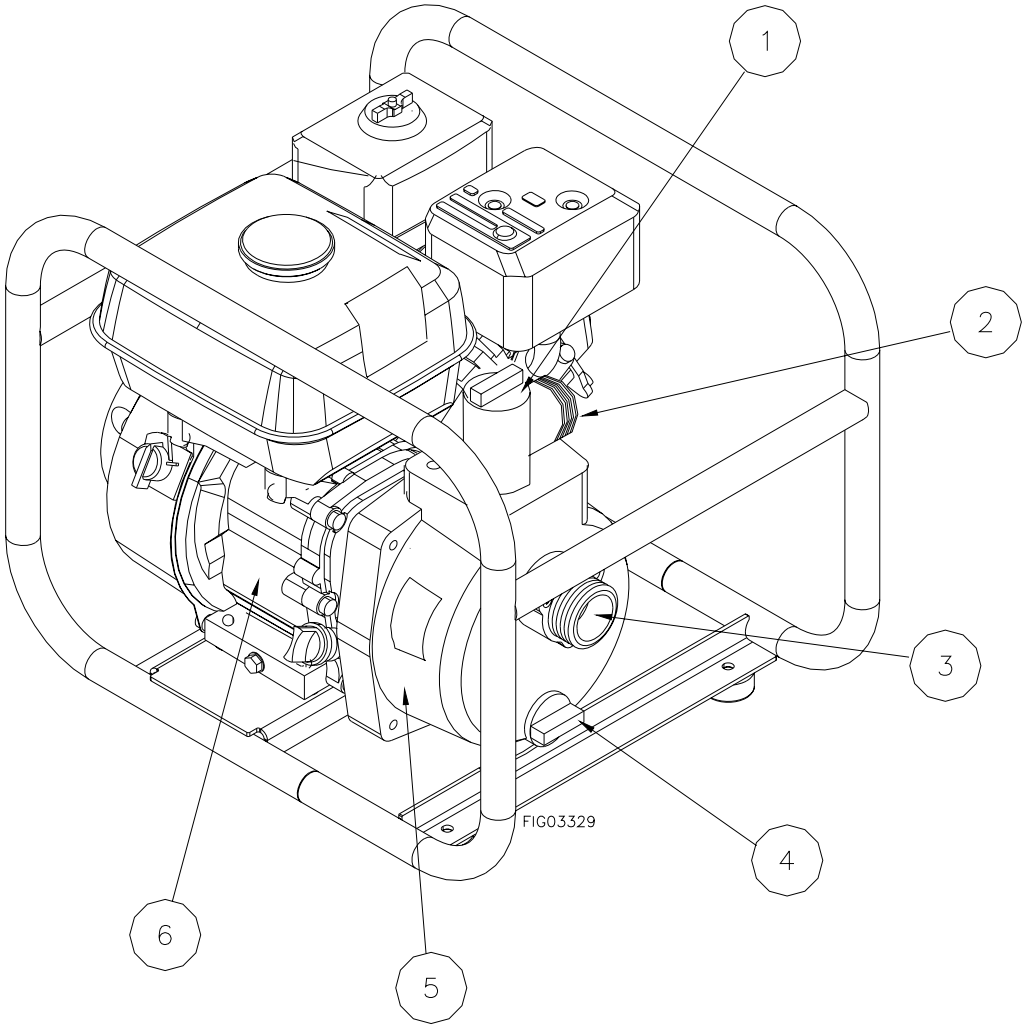


1. **Prime Port:** Fill the priming port to prime the pump.
2. **Discharge Fitting:** Connect the discharge hose to the discharge fitting.
3. **Suction Fitting:** Connect the suction hose to the suction fitting.
4. **Drain Port:** Drain the liquid in the pump through the drain port.
5. **Pump:** The pump moves the liquid.
6. **Engine:** The air-cooled engine powers the pump.

# Operation – Preparing the Water Pump for Each Use

## Step One: Inspect/Repair

If the water pump has been used previously, it must be prepared BEFORE EACH SUBSEQUENT USE.

**⚠ WARNING**

Read instructions below carefully for inspecting and preparing the water pump.
Damaged or clogged equipment could result in leaks or uncontrolled spray.

**Important safety rules:**

- **Turn off engine.** Turn off engine and remove spark plug cap before cleaning, inspecting, or servicing the water pump.
- **Guards / shields.** Make sure all guards and shields are replaced after servicing the water pump.
- **Replacement parts.** If a part needs replacement, only use parts that meet the manufacturer's specifications. Replacement parts that do not meet specifications may result in a safety hazard or poor operation of the water pump.

| | |
|---|---|
| **1. Ensure water pump casing is empty** | **Ensure the water pump has been thoroughly flushed with clean water and drained from prior use.** |
| **2. Clean suction strainer** | **Clean the suction strainer of any material residue.**<br>It is important to clean the suction strainer of debris before each use, to ensure it is not clogged. |
| **3. Inspect & repair** | **Inspect and test the water pump thoroughly**<br>a. Inspect fittings for cracks and leaks. Replace all damaged fittings with original NorthStar parts.<br>b. Check to be sure all nuts, bolts, and screws are tight.<br>c. Check oil level in engine. See engine owner's manual.<br>d. Check for fuel leaks. Any fuel leak is a fire hazard. Fix any fuel leaks before starting engine. |

# Operation – Preparing the Water Pump for Each Use

## Step Two: Fueling

| ⚠ WARNING |
|---|
| Gasoline is highly flammable and explosive. You can be burned or seriously injured when handling fuel. Use extreme care when handling gasoline. |

| | |
|---|---|
| **1. Engine off / cool** | **The engine must be off and allowed to cool at least two minutes before adding fuel.**<br>⚠ **WARNING**: A running engine is hot enough to ignite fuel. Never add fuel or remove gas cap if engine is running or still hot. |
| **2. Outdoor location** | **Fill fuel tank outdoors – never indoors.**<br>⚠ **WARNING:** Gasoline vapors can ignite if they collect inside an enclosure. Explosion can result. |
| **3. Check engine oil level** | **Check engine oil level as specified in the engine manual.** |
| **4. Remove gas cap** | **Remove gas cap.** |
| **5. Add gasoline** | **Add gasoline through fill opening from a UL-approved container.**<br>**Important Safety Instructions:**<br>• **Use approved container**. NEVER pump fuel directly into engine at gas station. Static charge can build and ignite fuel. Use a UL approved fuel container to transfer gas to the engine.<br>• **With the engine stopped** and on a level surface, remove the fuel filler cap and check the fuel level. Refill the tank if the fuel level is low.<br>• **Don't overfill**. DO NOT overfill the gas tank. Wipe up spilled fuel before starting the engine.<br>• **Heat / flames / sparks**. Stay away from sources of heat, flame, or sparks while adding fuel. |
| **6. Spills / splashes** | **Clean up fuel spills /splashes immediately.**<br>Move water pump away from spilled fuel on the ground.<br>1. Wipe fuel off engine and wait 5 minutes for excess fuel to evaporate before starting engine.<br>2. Gas soaked rags are flammable and should be disposed of properly.<br>3. If gasoline is spilled on your skin or clothes, change clothes and wash skin immediately. |
| **7. Replace gas cap** | **Replace gas cap securely before starting engine.** |
| **8. Gasoline storage** | **Store gasoline in a cool, dry place in a UL approved, tightly sealed container.** |

# Operation – Preparing the Water Pump for Each Use

## Step Three: Attach a suction strainer

| WARNING |
|---|
| This pump is design to pump water only. Never use the water pump to pump flammable liquids. |

| | |
|---|---|
| **1. Attach suction strainer** | A suction strainer should be attached to the suction hose. A suction strainer has holes or slots small enough to prevent large debris from working through and damaging the pump. |
| **2. Keep the strainer clean** | Keep the strainer clean.<br>If possible, suspend the strainer to keep it from working into sediment.<br>-OR-<br>A) Prepare a bed of large stones on which the strainer will rest.<br>B) Tie the strainer inside a basket or pail. |

## Step Four: Place the water pump

| | |
|---|---|
| **1. Place the water pump near liquid surface** | Place the water pump on a level surface in a location as near to the liquid surface as possible, this will ensure proper pump suction.<br>All hoses must be kept as straight as possible, avoid sharp bends.<br>NOTE: 23ft is the maximum height of suction head. |
| **2. Use flexible hose** | Use at least 12” of flexible hose to make plumbing connections to the pump body. Rigid piping may put stresses on the pump, causing damage. |
| **3. Place unit on secure footing** | Always be sure the unit is on a secure footing. Keep the immediate pump area free of all unauthorized personnel. If the water pump is sitting beside a pit, be sure it is well anchored so that it does not fall in. |
| **4. Do not run the pump dry** | Do not run the pump dry. Always fill the pump body with water before starting. It is not necessary to drain the pump body after each use, unless there is danger of freezing, settling of solids, or crystallization. |
| **5. Fill the pump with water** | Fill the pump with water utilizing the priming port on the top of the pump.<br>(The pump self primes only when it is first filled with priming water.)<br>All hoses and pipe connections must be airtight. |

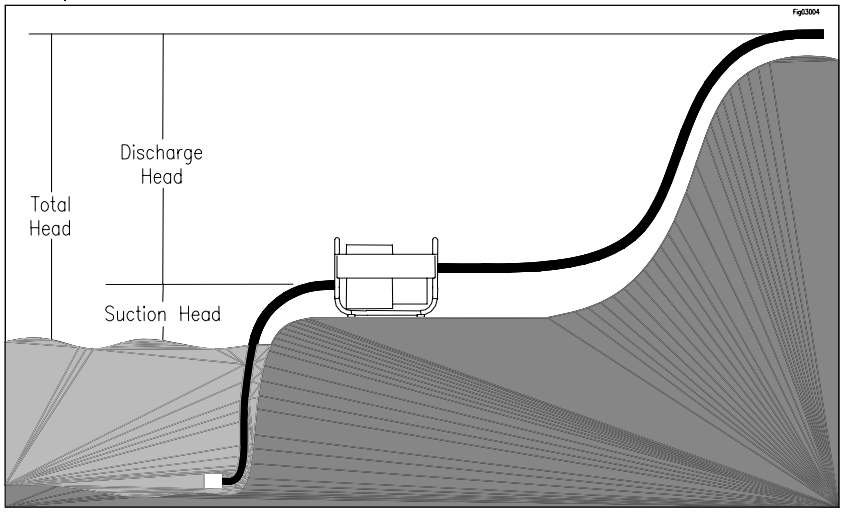

# Operation – Using the Water Pump

## Operate the water pump

| ⚠ WARNING |
|---|
| Do not run the water pump unattended. |

| | |
|---|---|
| **1. Review safety information** | **Review the "Operation – Important Safety Information"** provided in this manual. |
| **2. Priming** | Using the priming port on the top of the pump, completely fill the pump chamber with water before starting the engine. |
| **3. Engine operation precautions** | **Heed the following safety rules with regard to running the water pump engine:**<br>• **Hot muffler**. If you are starting a warm engine, stay clear of muffler. It may still be hot enough to burn you.<br>• **Hot exhaust**. Hot exhaust fumes from engine can cause fire. Position muffler at least 7' from combustible objects during operation.<br>• **Fire extinguisher**. Have a Class B fire extinguisher available as a precautionary measure when operating the water pump engine in dry areas.<br>• **Carbon monoxide.** The running engine gives off carbon monoxide, a poisonous gas that can kill you. You CANNOT smell it, see it, or taste it. ONLY run the water pump engine OUTDOORS and away from air intakes. NEVER run the water pump engine inside homes, garages, sheds, or other semi-enclosed spaces. These spaces can trap poisonous gases, EVEN if you run a fan or open windows. If you start to feel sick, dizzy, or weak while using the water pump, shut off the engine and get to fresh air RIGHT AWAY. See a doctor. You may have carbon monoxide poisoning. |
| **4. Start engine** | **Consult the engine Owner's Manual for starting the engine.** |
| **5. Throttle control** | When operating the water pump much higher than the water surface, you may need to speed up the engine, using the throttle. When the pump is near the water surface, a slower engine speed can be used. This will save engine fuel and life.<br><br>Consult the engine Owner's Manual for throttle location. |
| **6. Secure flexible hose** | **Never allow a vehicle to run over the flexible hose**. This sudden shut off pressure can cause "hydraulic shock".<br><br>If your flexible hose must be laid across a high traffic area, it is advised to protect the flexible hose with planking. |
| **7. Keep pump from freezing** | **Never allow water to freeze in the pump.** Freezing water can be extremely dangerous to the pump, always drain the water from the pump if freezing temperatures are a factor. |
| **8. Flush the pump** | **Flush the pump with clean water after each use is advised.** Some liquids being pumped may leave a solid or sticky residue. This may shorten the life of your pump. |

# Storage

Prepare the water pump for end-of-season storage by running clean water through the system. This will flush out any contaminants and clean the water pump internals. After the water pump has been flushed with clean water, completely drain the water pump of all water to protect from freezing.

**⚠ WARNING**

Gasoline vapors can ignite and cause a fire. Select a well-ventilated storage area away from sources of heat, flame, or sparks.

**⚠ CAUTION**

The water pump will be damaged if it freezes.
Protect the water pump from freezing during storage by following the instructions below.

**Preparing for storage:**

| | |
|---|---|
| **1. Flush the pump** | **Flush the pump with clean water after each use is advised.** Some liquids being pumped may leave a solid or sticky residue. This may shorten the life of your pump. |
| **2. Drain the water pump** | Using the water pump drain plug, drain the water pump completely of water to prevent freezing. |
| **3. Engine storage** | **Refer to the engine manual for proper engine storage instructions.**<br>- Always disable the engine for storage by unplugging the spark plug wire.<br>⚠ **CAUTION:** Gasoline will oxidize and deteriorate in storage. Old gasoline in the engine will cause hard starting and leave gum deposits that can clog the fuel system. Deterioration problems may occur within a few months, or even less if gasoline was not fresh when you filled the fuel tank.<br>**Short-Term Storage**:<br>Consider adding a fuel stabilizer to extend fuel storage life.<br>**Long Term Storage:** (between infrequent uses and at end of season)<br>Drain the fuel tank and carburetor as instructed in the engine owner's manual.<br>Important Safety Instructions:<br>• Always drain fuel from tank in outdoor, well-ventilated area.<br>• Stay away from sources of heat, flame, or sparks while handling fuel.<br>• Clean up fuel spills/splashes immediately. |
| **4. Water pump storage location** | **Store the water pump in a location away from corrosive material, sources of heat, open flames, sparks or pilot lights.**<br>⚠ **WARNING**: Never store water pump inside where there is a source of heat or an open flame, spark, or pilot light as on water heaters, space heaters, furnaces, clothes dryers, or other gas appliances EVEN IF the water pump's gas tank is empty. |
| **5. Gasoline storage** | **Store gasoline in a cool, dry place in a UL approved, tightly sealed container.**<br>⚠ **WARNING**: Gasoline vapors can ignite if they collect inside an enclosure and an explosion can result. |

# Troubleshooting

| ⚠ WARNING |
|---|
| Before troubleshooting or attempting to service, read the following safety rules. |

**Before attempting to service the water pump**:

| | |
|---|---|
| **1. Review troubleshooting table** | **Review the Troubleshooting Table below for the type of problem you are experiencing.** However, DO NOT attempt to repair until the steps listed below are followed. |
| **2. Flush the pump** | **Pump clean water** briefly through the pump to removed any debris/solids.. |
| **3. Drain the water pump** | **Drain the water pump completely of water** using the water pump drain plug, to prevent freezing. |
| **4. Disconnect power** | **Switch off the engine and unplug the spark plug wire.** |
| **5. Perform repairs** | **Follow the directions provided in the troubleshooting table to repair the water pump.** |

| PROBLEM | CAUSE | SOLUTION |
|---|---|---|
| Pump doesn't revolve | 1. Engine will not turn over | See engine owner's manual |
| | 2. Rusting/Sticking of impeller | Disassemble and clean |
| Pump fails to prime | 1. Priming chamber not full enough | Add more water to priming chamber |
| | 2. Air leaks on suction line joints | Check for loose screws or broken hoses |
| | 3. Quick coupling gaskets worn | Replace gaskets |
| | 4. Loose or broken hose clamps | Tighten or replace hose clamps |
| | 5. Priming chamber is over heated | Pour cold water in chamber or let cool |
| | 6. Engine speed is too slow | Increase engine speed |
| | 7. Worn or broken volute or impeller | Replace worn or broken component |
| | 8. Worn or broken mechanical seal | Replace mechanical seal |
| Low capacity | 1. Clogged suction hose | Clear obstruction |
| | 2. Dirty suction strainer | Clear suction strainer |
| | 3. Flow restriction due to hose kinks | Straighten suction and discharge hoses |
| | 4. Suction lift too high | Move pump closer to water surface |
| | 5. Engine speed too low | Increase engine speed |
| | 6. Worn or broken mechanical seal | Replace mechanical seal |
| | 7. Reduced engine performance | See engine owner's manual |
| | 8. Clogged impeller | Remove clog |
| | 9. Worn impeller | Replace impeller |

# Specifications

| 106470 – 2” High Pressure | |
|---|---|
| Engine | Honda GX160 |
| Suction & Discharge Size | 2” NPT |
| Maximum Flow | 8,120 GPH |
| Maximum Suction Head | 23 FT |
| Maximum Total Head | 214 FT |
| Maximum Pressure | 94 PSI |
| Passable Solid Size | Clear Water Only |
| Mechanical Seal | Silicon Carbide |
| Overall Dimensions (L x W x H) | 20" x 16" x 16" |
| Dry Weight | 60 lbs |

| 106471 – 3” High Pressure | |
|---|---|
| Engine | Honda GX270 |
| Suction & Discharge Size | 3” NPT |
| Maximum Flow | 10,550 GPH |
| Maximum Suction Head | 23 FT |
| Maximum Total Head | 263 FT |
| Maximum Pressure | 116 PSI |
| Passable Solid Size | Clear Water Only |
| Mechanical Seal | Silicon Carbide |
| Overall Dimensions (L x W x H) | 25" x 18" x 21" |
| Dry Weight | 80 lbs |

The manufacturer reserves the right to make improvements in design and/or changes in specifications at any time without incurring any obligation to install them on units previously sold.

**Any Questions, Comments, Problems or Parts Orders**

***Call NorthStar Product Support 1-800-270-0810***

# 106470/106471 Exploded View – Rev. B

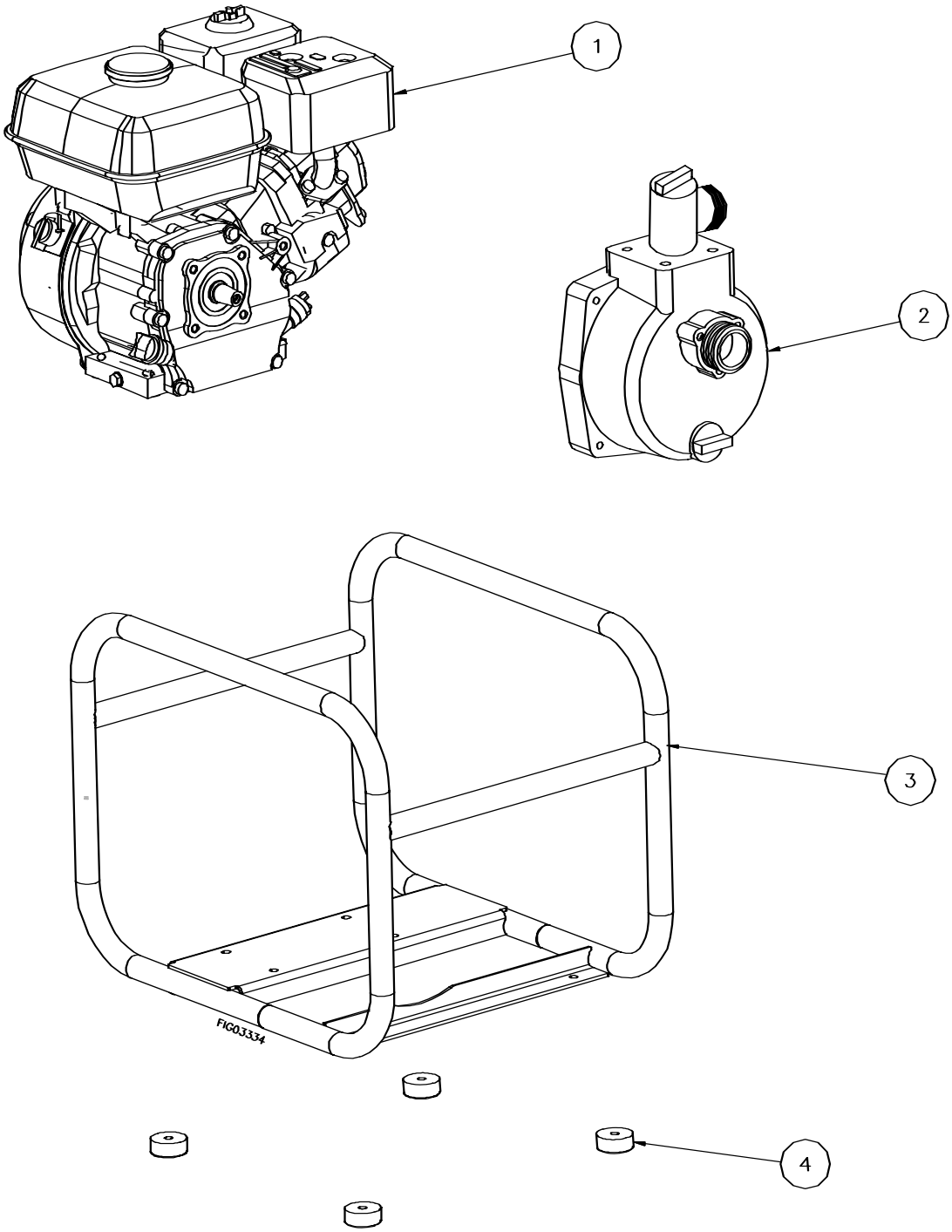


| Item | Part # | Description | Model | Qty. |
|---|---|---|---|---|
| 1 | 60590 | GX160 Honda Engine | 106470 | 1 |
| | 39115 | GX270 Honda Engine | 106471 | |
| 2 | 782592 | 2” High Pressure Pump | 106470 | 1 |
| | 782593 | 3” High Pressure Pump | 106471 | |
| 3 | 782529 | Frame | 106470 | 1 |
| | 782542 | | 106471 | |
| 4 | 2215 | Bumper (Rubber Foot) | ALL | 4 |

# 782592 Pump Exploded View

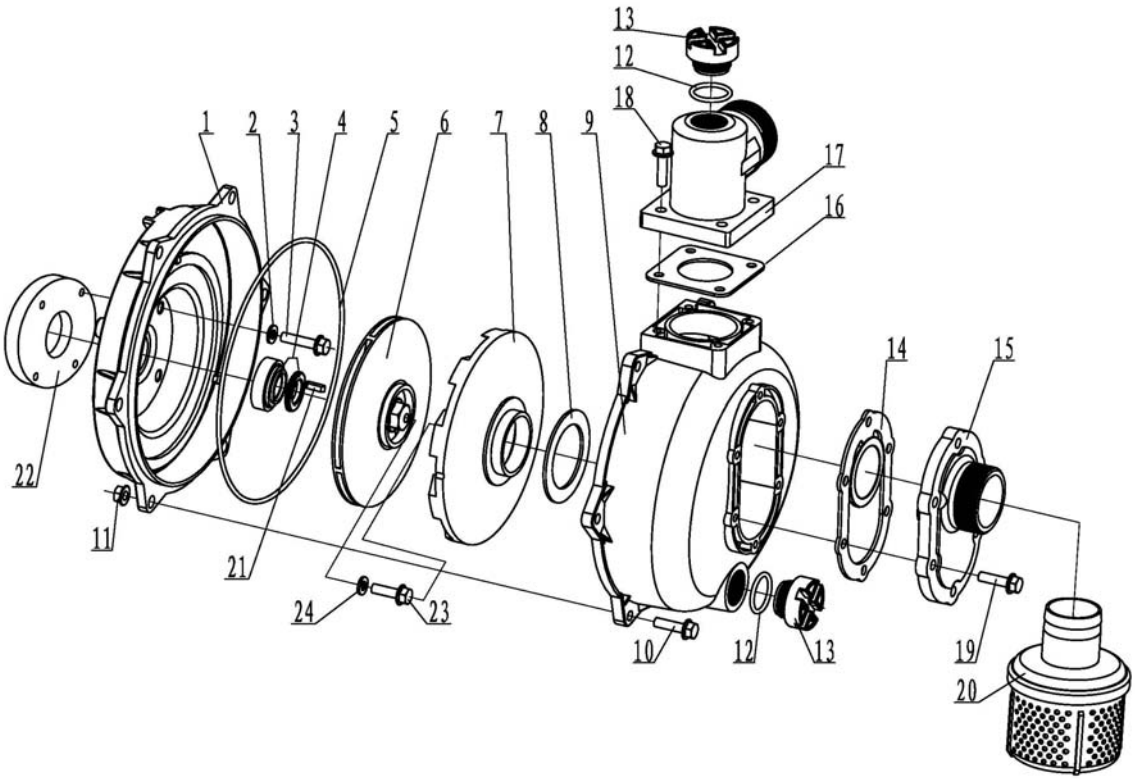


| Item | Description | Part # | Qty. |
|---|---|---|---|
| 1 | Pump Cover | 782970 | 1 |
| 2 | Sealing Washer & M8 x 35 Hex Bolt Kit | 782971 | 4 |
| 3 | | | |
| 4 | Mechanical Seal | 782972 | 1 |
| 5 | Large O-ring | 782973 | 1 |
| 6 | Impeller | 782974 | 1 |
| 7 | Volute | 782975 | 1 |
| 8 | Small O-ring | 782976 | 1 |
| 9 | Pump Body | 782977 | 1 |
| 10 | M8 x 30 Hex Bolt | 782978 | 6 |
| 11 | M8 Hex Nut | 782979 | 6 |
| 12 | Plug O-ring & Drain/Prime Plug Kit | 782980 | 2 |
| 13 | | | |

| Item | Description | Part # | Qty. |
|---|---|---|---|
| 14 | Inlet Check Valve | 782981 | 1 |
| 15 | Inlet Flange | 782982 | 1 |
| 16 | Outlet Seal | 782983 | 1 |
| 17 | Outlet Flange | 782984 | 1 |
| 18 | M8 x 25 Hex Bolt | 782985 | 4 |
| 19 | M8 x 20 Hex Bolt | 782986 | 6 |
| 20 | Strainer | 782987 | 1 |
| 21 | Key | 783018 | 1 |
| 22 | Spacer | 783019 | 1 |
| 23 | Shaft Bolt | 783020 | 1 |
| 24 | O-ring | 783021 | 1 |

# 782593 Pump Exploded View

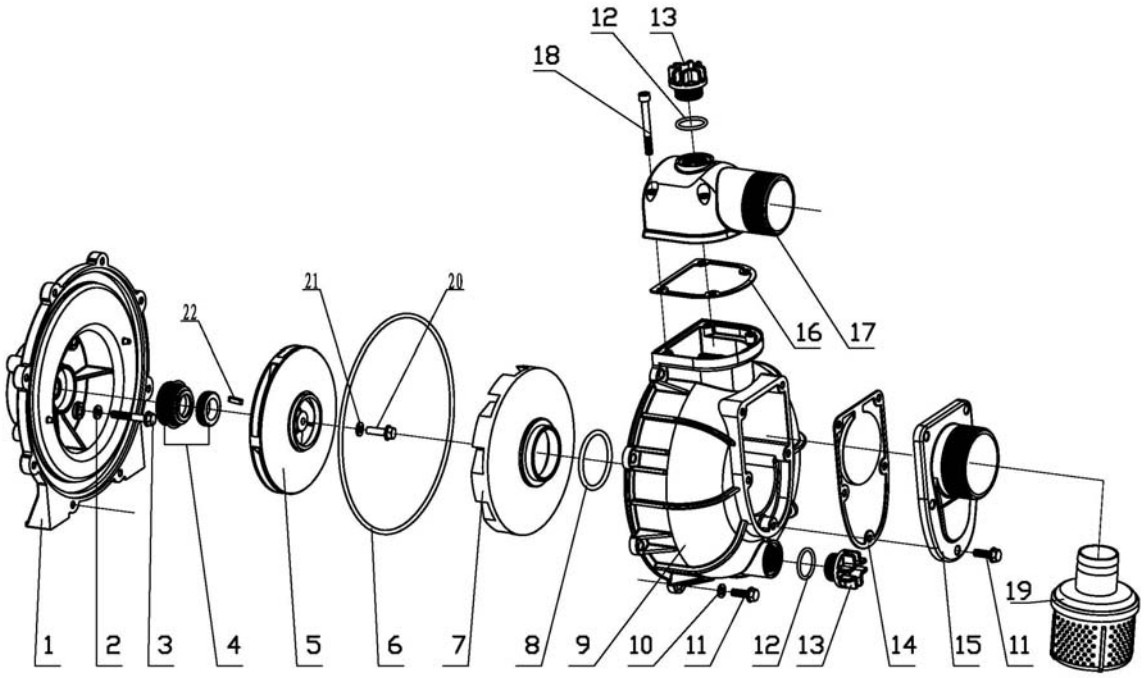


| Item | Description | Part # | Qty. |
|---|---|---|---|
| 1 | Pump Cover | 782988 | 1 |
| 2 | Nylon Washer | 782989 | 4 |
| 3 | M8 x 50 Hex Bolt | 782990 | 4 |
| 4 | Mechanical Seal | 782991 | 1 |
| 5 | Impeller | 782992 | 1 |
| 6 | Large O-ring | 782993 | 1 |
| 7 | Volute | 782994 | 1 |
| 8 | Small O-ring | 782995 | 1 |
| 9 | Pump Body | 782996 | 1 |
| 10 | Connection Washer | 782997 | 8 |
| 11 | M8 x 50 Hex Bolt | 782998 | 13 |

| Item | Description | Part # | Qty. |
|---|---|---|---|
| 12<br>13 | 31.5 x 3.55 O-ring & Plug Kit | 782999 | 2 |
| 14 | Inlet Check Valve | 783000 | 1 |
| 15 | Inlet Flange | 783001 | 1 |
| 16 | Outlet Seal | 783002 | 1 |
| 17 | Outlet Flange | 783003 | 1 |
| 18 | M8 x 70 Hex Bolt | 783004 | 4 |
| 19 | Suction Strainer | 783005 | 1 |
| 20 | Shaft Bolt | 783022 | 1 |
| 21 | Washer | 783023 | 1 |
| 22 | Key | 783024 | 1 |

+

# Limited Warranty

Dear Valued Customer:

The NorthStar Product you just purchased is built with the finest material and craftsmanship. Use this product properly and enjoy the benefits from its high performance. By purchasing a NorthStar product, you show a desire for quality and durability.

Like all mechanical equipment this unit requires a due amount of care. Treat this unit like the high quality piece of machinery it is. Neglect and improper handling may impair its performance. Please thoroughly read the instructions and understand the operation before using your product.

# Limited Warranty

NorthStar shall warranty any piece of equipment manufactured, or parts of equipment manufactured, to be free from defects in material or workmanship for a period of 2 year from the date of purchase by user. This warranty applies to the original purchaser of the equipment and is non transferable. Verification of purchase is the responsibility of the buyer. Parts will be replaced or repaired at no charge, except when the equipment has failed due to lack of proper maintenance. Any misuse, abuse, alteration or improper installation or operations will void warranty. Determining whether a part is to be replaced or repaired is the sole decision of NorthStar.

**NOTE:** Some services performed by parties other than NorthStar may void warranty.

This warranty covers parts only. It will not provide for replacement of complete products due to defective parts. Components not manufactured by NorthStar such as engines are guaranteed by their manufacturer and can be serviced at factory-authorized locations near you. Any costs incurred due to replacement or repair of items outside of a NorthStar approved facility is the responsibility of the buyer and not covered under warranty. NorthStar can supply you with the service center location in your area.

This warranty specifically excludes the following; failure of parts due to damage caused by accident, fire, flood, windstorm, acts of God, applications not approved by NorthStar in writing, corrosion caused by chemicals, use of replacement parts which do not conform to manufacturer's specifications, and damage caused by vandalism. Additional exclusions: loss of running time, inconvenience, loss of income, or loss of use, including any implied warranty of merchantability of fitness for a specific use.

Warranty does not cover items subject to normal wear such as tires, receptacles or any part subject to direct physical contact by the public. This warranty does not cover any personal injury or damage to surrounding property caused by failure of any part.

This warranty is in lieu of any other warranty expressed or implied and NorthStar assumes no other responsibility or liability outside that expressed within this warranty.

Please fill in the following information and have it on hand when you call in a warranty claim.

Customer Number: _____

Date of Purchase: _____

NorthStar Serial Number: _____

Item Number: _____

Manufactured by
Northern Tool + Equipment Co.,
2800 SouthCross Drive West
P.O. Box 1499 Burnsville, MN 55337-0499