WINCO INC®
A Division of DTI Dyna Technology Inc

PACKAGE STANDBY SYSTEMS

PSS21/A WITH DEEP SEA CONTROL

INSTALLATION AND OPERATIONS MANUAL

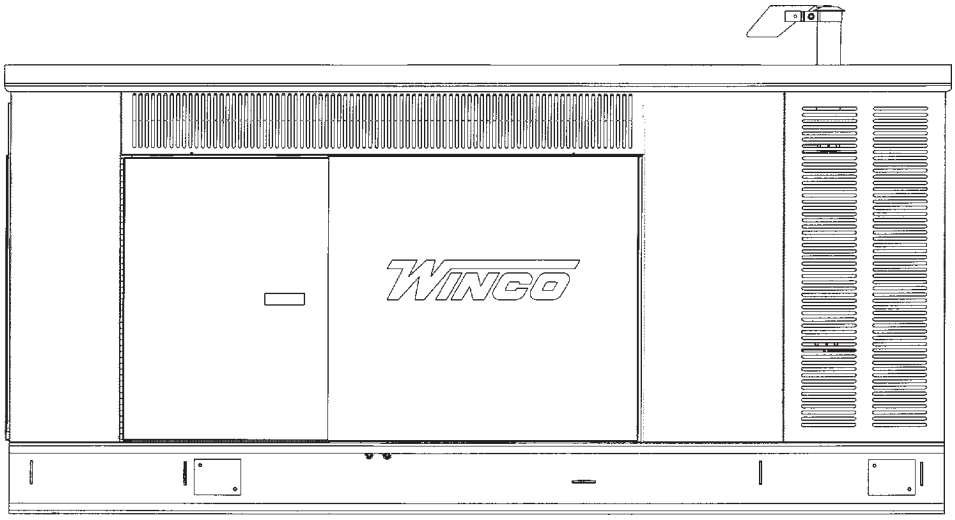

WINCO INC
A Division of DTI Dyna Technology Inc

SAVE THESE INSTRUCTIONS

This manual contains important instructions that should be followed during installation and maintenance of the generator and batteries.

Read and understand all instructions in the manual before starting and operating the generator set.

USING THIS MANUAL

Congratulations on your choice of a Winco generator set. You have selected a high-quality, precision-engineered generator set designed and tested to give you years of satisfactory standby service.

To get the best performance from your new engine generator set, it is important that you carefully read and follow the operating instructions in this manual.

Should you experience a problem please follow the “Things To Check” near the end of this manual. The warranty listed in this manual describes what you can expect from WINCO should you need service assistance in the future.

COPY YOUR MODEL AND SERIAL NUMBER HERE

No other WINCO generator has the same serial number as yours. It is important that you record the number and other vital information here. If you should ever need to contact us on this unit it will help us to respond to your needs faster.

MODEL_____

SERIAL NUMBER_____

PURCHASE DATE_____

DEALER_____

TABLE OF CONTENTS

INTRODUCTION	i
GUIDE TO PRODUCT SAFETY	1
BASIC INFORMATION	2
Description	2
DSE-7X10 Description	3
Specification Table	3
PREPARING THE UNIT	3
Unpacking the unit	3
ENGINE GENERATOR INSTALLATION	3
Installation	4
Fuel Line Installation	4
Fuel Pressure Tables	5
LP Liquid Withdrawal	5
Lubrication	5
Coolant	5
Battery Installation	5
Battery Charger/Block Heater Wiring	6
AC Electrical Connections	7
DC Electrical Connections	8
DSE 7X10 Engine Control Layout	9
DSE 7X10 Operations	10
INITIAL START-UP	10
EXERCISER CLOCK	11
TROUBLESHOOTING INFORMATION	12
CHANGING THE FUEL TYPE	12
VOLTAGE REGULATOR WIRING	13
AC WIRING - THREE PHASE	
277/480 Volt	14
120/208 Volt	14
120/240 Volt	15
AC WIRING - SINGLE PHASE	
120/240 Volt	15
DC SCHEMATIC - WIRING DIAGRAM	16
OUTLINE DRAWING	17
DSE7X10 CONTROL ICONS	18
WARNING ALARM ICONS	19
SHUTDOWN ALARM ICONS	20
ACCESING FRONT PANEL CONFIGURATION	21
12 MONTH WARRANTY	22

PROPER USE AND INSTALLATION

You must be sure your new engine generator set is:

* Properly serviced before starting
* Operated in a well ventilated area
* Properly exhausted and gases safely dispersed
* Wired by a qualified electrician
* Operated only for its designed purposes
* Used only by operators who understand its operation
* Properly maintained

IMPORTANT SAFETY INSTRUCTIONS

SAVE THESE INSTRUCTIONS

This manual contains important instructions that should be followed during installation and maintenance of the generator and batteries.

Read and understand all instructions in the manual before starting and operating the generator set.

This engine generator set has been designed and manufactured to allow safe, reliable performance. Poor maintenance, improper or careless use can result in potential deadly hazards; from electrical shock, exhaust gas asphyxiation, or fire. Please read all safety instructions carefully before installation or use. Keep these instructions handy for future reference. Take special note and follow all warnings on the unit labels and in the manuals.

ANSI SAFETY DEFINITIONS

****

DANGER:

*DANGER indicates an imminently hazardous situation which, if not avoided, **will** result in death or serious injury. This signal word is to be limited to the most extreme situations.*

****

****

WARNING:

*WARNING indicates a potentially hazardous situation which, if not avoided, **could** result in death or serious injury.*

****

****

CAUTION:

CAUTION indicates a potentially hazardous situation which, if not avoided, may result in minor or moderate injury. It may also be used to alert against unsafe practices.

****

NOTE:

CAUTION is also used on the unit labels and in this manual to indicate a situation that could result in serious damage or destruction of the equipment and possible personal injury.

1. **ELECTRIC SHOCK -** The output voltage present in this equipment can cause a fatal electric shock. This equipment must be operated by a responsible person.

   a. Do not allow anyone to operate the generator without proper instruction.
   b. Guard against electric shock.
   c. Avoid contact with live terminals or receptacles.
   d. Use extreme care if operating this unit in rain or snow.
   e. Use only three-prong grounded receptacles and extension cords.
   f. Be sure the unit is properly grounded to an external ground rod driven into the earth.

2. **FIRE HAZARD -** Natural gas and L.P. present a hazard of possible explosion and/or fire.

   a. Do not smoke or use open flame near the generator set.
   b. Keep a fire extinguisher nearby and know its proper use. Fire extinguishers rated ABC by NFPA are appropriate.

3. **DEADLY EXHAUST GAS** - Exhaust fumes from any gasoline engine contain carbon monoxide, an invisible, odorless and deadly gas that must be mixed with fresh air.

   a. Operate only in well ventilated areas.
   b. Never operate indoors.
   c. Never operate the unit in such a way as to allow exhaust gases to seep back into closed rooms (i.e. through windows, walls or floors).

4. **NOISE HAZARD -** Excessive noise is not only tiring, but continual exposure can lead to loss of hearing.

   a. Use hearing protection equipment when working around this equipment for long periods of time.
   b. Keep your neighbors in mind when permanently installing this equipment.

5. **CLEANLINESS -** Keep the generator and surrounding area clean.

   a. Remove all grease, ice, snow or materials that create slippery conditions around the unit.
   b. Remove any rags or other material that could create potential fire hazards.
   c. Carefully wipe up any gas or oil spills before starting the unit.
   d. Never allow leaves or other flammable material to build up around the engine exhaust area.

6. **SERVICING EQUIPMENT -** All service, including the installation or replacement of service parts, **should be performed only by a qualified technician.**

   a. Use only factory approved repair parts.
   b. Do not work on this equipment when fatigued.
   c. Never remove the protective guards, cover, or receptacle panels while the engine is running.
   d. Use extreme caution when working on electrical components. High output voltages from this equipment can cause serious injury or death.
   e. Always avoid hot mufflers, exhaust manifolds, and engine parts. They all can cause severe burns instantly.
   f. Installing a generator set is not a “do-it-yourself” project. Consult a qualified, licensed electrician or contractor. The installation must comply with all national, state, and local codes.
   g. Always make sure unit is disabled before placing your hands anywhere near the fan, belts, alternator or water hoses.

TESTING POLICY:

Before any generator is shipped from the factory, it is fully checked for performance. The generator is loaded to its full capacity, and the voltage, current, and frequency are carefully checked.

Rated output of generators is based on engineering tests of typical units, and is subject to, and limited by, the temperature, altitude, fuel, and other conditions specified by the manufacturer of the applicable engines.

INTRODUCTION AND DESCRIPTION

With the addition of an Automatic Transfer Switch this package standby system includes all items necessary for a completely automatic standby power system.

DESCRIPTION

This package power system is designed to automatically provide standby power to unattended loads during electrical outages. Upon an interruption of normal electrical service this package power system's electrical control circuits will automatically start the engine. The generator will produce electrical power and the Automatic Transfer Switch (A.T.S.) will automatically transfer the electrical loads to the engine-generator set. Upon restoration of normal electrical service the A.T.S. will sense return of the normal commercial power and retransfer the load back to normal commercial power source. The engine control circuits shut off the run signal to the engine generator set.

These package power systems consist of two major components:

1) AUTOMATIC TRANSFER SWITCH (UL LISTED)

The Automatic Transfer Switches (A.T.S.) are wall mount switch designed for inside installation. A electronic exerciser circuit is installed in the A.T.S. as standard equipment. The A.T.S. also contains the power failure sensing circuitry necessary to send a start/stop signal to the engine generator set. The following is a list of recommended A.T.S. sizes for each model. Outdoor switches as well as additional sizes are available, consult your sales rep for additional information.

MODEL	VOLTAGE	MINIMUM RECOMMENDED ATS AMPERAGE
PSS21-3	120/240	100
PSS21-4	120/208	100
PSS21-17	120/240	100
PSS21-18	277/480	100

Additional optional A.T.S. sizes are available to meet specific needs. Contact your local WINCO dealer or the WINCO Sales Department for a quote.

2) ENGINE/GENERATOR

This engine generator set consists of a GM 3.0L, I-4 Industrial, four cylinder, liquid cooled engine equipped to run on L.P./N.G. fuel. The engine operates at 1800 rpm and frequency regulation is maintained by the electronic governor within .5 cycles variation, from no load to rated load. The generator is a single bearing, direct drive, rotating field design. The generator is connected to the engine flywheel via flexible drive disks. The engine generator is mounted in a weather proof enclosure for outside installation. Connection boxes are provided to all customer connections (both AC output and DC control). A **customer supplied** 12 Volt, 650 CCA (BCI group 24) battery is required to complete the installation. Engine operation is controlled by a Deep Sea automatic start control module.

ENGINE CONTROL MODULE (DSE 7310)

The DSE 7X10 control modules provide integrated engine and generator set control, protection and metering in a single package. Microprocessor based technology allows for exact measurement, set point adjustment, and timing functions. Front panel controls and indicators enable quick and simple operation.

Fully configurable via PC software, allows units to be easily customized for each application. Includes selected front panel programming for on site changes. A wide temperature-range liquid crystal display (132 x 64) with backlighting can be viewed under a wide range of ambient light and temperature conditions.

DSE 7110 & 7310 Control Modules have the following features:

- Local and Remote Generator Control
- Engine and Generator Protection
- CAN Bus compatible
- Programmable Logic
- Five-key Menu Navigation
- Engine Exercise Mode

DSE7310 the following additional features

- Automatic Transfer Switch Control (Mains Failure)
- User Selectable RS232 & RS485 (Remote Operation)

FUNCTIONS

DSE 7X10 Control Modules perform the following functions:

Generator Protection and Metering

Generator protection includes over voltage, under voltage, under frequency, over frequency and overload protection. Each generator protection function has an adjustable pickup and time delay setting. Metered generator parameters include voltage, current, real power (watts), power factor (PF)

Engine Protection and Metering

Engine protection features include oil pressure and coolant temperature monitoring, over crank protection, ECU specific protection elements, and diagnostic reporting.

Metered engine parameters include, oil pressure, coolant temperature, battery voltage, speed, engine load, coolant level (from ECU), ECU specific parameters, and run-time statistics.

**** NOTICE ****

These units will automatically transfer if a power outage occurs while running in an exercise mode.

SPECIFICATIONS

GENERATOR

MODEL	WATTS	VOLTS	AMP	HZ	PH	RPM
PSS21-3	21,000	120/240	89.0*	60	1	1800
PSS21-4	22,000	120/208	76.4**	60	3	1800
PSS21-17	22,000	120/240	66.2**	60	3	1800
PSS21-18	25,000	277/480	37.6**	60	3	1800

*Unity Power Factor - Derate 3.5% per 1000 feet elevation above sea level.
**Power Factor .8 - Derate 3.5% per 1000 feet elevation above sea level.

FUEL CONSUMPTION

	NG (1,000 BTU/CU FT)		L.P. VAPOR (2,520 BTU/CU FT)			
MODEL	CF/HR	BTU/HR	#/HR	GAL/HR	CF/HR	BTU/HR
PSS21	340	340,000	16.3	3.9	136.9	344,983

L.P. TANK SIZING

Minimum required L.P. tank size for L.P. Vapor withdrawal operating at various outside temperatures given in degrees Fahrenheit (Celsius)

	TANK TEMPERATURE			
MODEL	60 F(16 C)	30 F(0 C)	0 F(-18 C)	-20 F(-29 C)
PSS21	160 Gal	300 Gal	1000 Gal*	2000 Gal*

*Recommend liquid withdrawal at these temperatures.

ENGINE SPECIFICATIONS:

Refer to engine operating and maintenance instructions

** NOTICE **

Regarding Engines - This manual covers the generator portion of these units. See the separate engine instruction manual for engine-related problems, detailed engine information and engine warranty.

**** CAUTION ****

EQUIPMENT DAMAGE - *Be sure to check the engine oil level frequently as specified in the engine manual.*

The engine manufacturer has established an excellent worldwide engine service organization; engine service is available from a nearby authorized dealer or distributor; check the Yellow Pages of the telephone directory under “engines,” or ask the dealer from whom you purchased the power plant.

The rated power of each engine-generator is limited by the temperature, altitude and all other ambient conditions specified by the engine manufacturer. Engine power will decrease 3-1/2% for each 1000 ft. above sea level, and will decrease an additional 1% for each 10° Fahrenheit above 60° Fahrenheit. Units should not be operated in ambient temperature greater than 40° C.

UNPACKING INSTRUCTIONS

** NOTICE **

When unpacking the generator set, be sure to inspect it carefully for freight loss or damage. If loss or damage is noted at the time of delivery, require that the person making the delivery make note of the loss or damage on the freight bill, or affix his signature under the consignee's memo of the loss or damage. Contact the carrier for claim procedures.

When loss or damage is noted after delivery, segregate the damaged material, and contact the carrier for claim procedures.

“Concealed Damage” is understood to mean damage to the contents of a package which is not in evidence at the time of delivery by the carrier, but which is discovered later. The carrier or carriers are responsible for merchandise lost or damaged in transit. The title to goods rests with the consignee when generators are shipped FOB factory, and only the consignee can legally file a claim.

**** CAUTION ****

EQUIPMENT DAMAGE - *These units are shipped with oil, and a 50/50 mix of coolant. Be sure to check all fluid levels before operating. See engine manufacturer’s instruction manual for recommended oil requirements before initial starting.*

UNPACKING:

1. Carefully remove the carton.
2. After inspecting the engine-generator for external physical damage, check for the following items packed inside the carton:
   a. Owner’s manual and wiring diagram.
   b. Engine manufacturer’s instruction manual.
3. Remove main frame hold down bolts, (6).
4. Unit can now be lifted from shipping rails.

INSTALLATION

****
***** WARNING *****
****

PERSONAL INJURY - *Before proceeding with the installation, be sure the operation selector switch is in the "stop" position.*

General Information

Note: Roof access panels have been provided to check/fill the engine oil and the coolant. Side panels may be removed by removing the thumb screws on the bottom under side of each panel

These engine generator sets are for outdoor installation. These units must be bolted solidly to a concrete pad. The transfer switch is mounted next to your distribution panel inside the building. Consult a qualified, licensed electrician or contractor to install and wire the transfer switch. The installation must always comply with all national, state, and local codes.

****** CAUTION ******

EQUIPMENT DAMAGE - *These units must be mounted on a solid concrete pad to prevent air from exiting under the unit. Allowing air to exit under the unit may cause the unit to overheat from lack of proper air flow.*

Before beginning the installation process recheck the rating of the generator set and its transfer switch rating. Be certain they can handle the intended load and are compatible with the entrance voltage, phase and current ratings. Plans for installation should be prepared with proper attention to mechanical and electrical engineering detail to assure a satisfactory system installation. The information in this manual is offered only as a guide to finalizing your installation plans. For full service switching the A.T.S. must have a fusible disconnect (circuit breaker) installed before the switch to protect the contacts.

ENGINE GENERATOR SET MOUNTING

The unit's main frame should be bolted solidly to a 4 to 6 inch thick cement pad. The engine-generator is mounted on a sub-frame which is attached with special shock mounts to the main frame. This allows the engine-generator free movement without affecting the control panel which is mounted on the main frame.

Do not shock mount the main frame. Engine vibration will be transmitted to the control panel causing erroneous start/stop cycles and premature control failure.

The unit should be mounted to allow for ample working room around it. A general rule to follow is five (5) feet clearance on all sides. See NFPA Code 37 for additional clearance requirements.

FUEL INSTALLATION

The fuel supply should be as close as possible to the engine. This will reduce the installation cost of fuel runs. The information in this manual is offered to assist you in providing the proper fuel for your engine. However, this information is only provided to inform you of the engine's requirements and assist in making you aware of the decisions you must make. In no case should the instructions or information provided be interpreted to conflict with any local, state or national codes. If in doubt, always consult your local fire marshal or gas supplier.

****
******* WARNING *******
****

FIRE HAZARD *- All fuel runs should be installed by a licensed fuel supplier.*

Connect the fuel supply to the inlet of the fuel solenoid (see table for recommended line size). The pressure at the secondary demand regulator must be four to six ounces psi (per square inch) or 7 to 11 inches W.C. (Water column) for vapor withdrawal units. On units equipped with liquid withdrawal fuel systems full tank pressure is plumbed to the fuellock strainer mounted on the generator rails. The fuel converter mounted on the unit will handle both vaporization of the fuel and pressure reduction.

INSTALLING THE FUEL LINE

**** NOTICE ****

The engine generator sets are properly adjusted before they leave the factory for a specific fuel, either NG (natural gas), LP (liquid propane vapor) or LPG (liquid withdrawal propane). This fuel type is noted in your model number. If it becomes necessary to change the fuel type in the field see information on page 12.

Line Size (vapor system)

Unit location will determine the size of fuel line that is required to supply the engine with a constant fuel pressure. Refer to the tables below for fuel line size, fuel consumption and recommended tank size. For distances of 25 feet and over, a two regulator fuel system is recommended. This is accomplished by installing a primary regulator at the tank which will reduce the tank pressure down to 10 to 15 lbs. A secondary regulator is installed to further reduce the fuel pressure to the required six (6) oz. operating pressure. This secondary regulator must be at least 10 feet from the engine generator set. Any closer installation will require a larger line be installed to provide a fuel reservoir. If this is not done, the demand regulator on the unit and the pressure regulator in the fuel line will interfere with each other. When this two (2) stage regulator system is used, a fuel line size of 3/4 to 1 inch is generally adequate for distances up to 300 feet from the primary to the secondary regulator. (Consult your local fuel supplier for your exact requirements). The appropriate line size from the table below is then installed from the secondary regulator to the generator set.

****
******* WARNING *******
****

PERSONAL DANGER *- Do not use galvanized pipe in fuel line runs. The galvanized coating can become eroded and flake off, causing possible obstructions in the regulator or fuel valve. The results could range from inoperative engine start to hazardous fuel leaks.*

Size of pipe normally required for generators operating on NG/LP:

	up to 25 feet*	over 25 feet*
PSS21	1" pipe	not recommended use a two regulator system

* Allow an additional 3 feet for each standard elbow.
Do not use 'street ells' (restrictive).

****** CAUTION ******

EQUIPMENT DAMAGE - *Be careful when sealing gas line joints. Excessive sealing compound can be drawn into the solenoid, regulator or carburetor causing an engine malfunction.*

FUEL PRESSURE (vapor system)

Correct fuel pressure cannot be stressed enough. The most common cause for inoperative systems is an inadequate or incorrect fuel pressure. Performance of the engine is in direct relation to the correctness of the fuel system. Shown below is a block diagram of a typical L.P. or N.G. Installation.

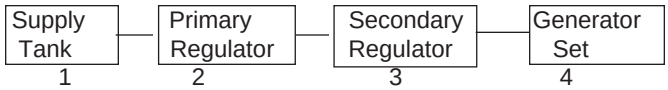

TWO (2) REGULATOR FUEL SYSTEM

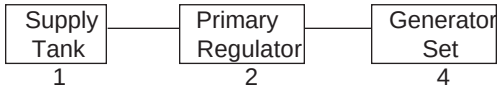

SINGLE REGULATOR FUEL SYSTEM

Reference numbers 1 through 3 in the block diagrams above are fuel lines supplied by customer.

Reference number 4 is the engine generator set.

Below is a table of the fuel pressure readings at each reference in the system.

Fuel Pressure Table

Single Regulator (L.P. Vapor only)

	1	**2**	**3**
UNIT OFF	TANK PSI	7-11 in 4-6 oz.	7-11 in 4-6 oz.
STARTING	TANK PSI	7-11 in 4-6 oz.	7-11 in 4-6 oz.
NO LOAD	TANK PSI	7-11 in 4-6 oz.	7-11 in 4-6 oz.
FULL LOAD	TANK PSI	7-11 in 4-6 oz.	7-11 in 4-6 oz.

Two (2) Regulator System (L.P. Vapor only)

	1	2	3	4
UNIT OFF	TANK PSI	10-15 lbs	7-11 in 4-6 oz.	7-11 in 4-6 oz.
STARTING	TANK PSI	10-15 lbs	7-11 in 4-6 oz.	7-11 in 4-6 oz.
NO LOAD	TANK PSI	10-15 lbs	7-11 in 4-6 oz.	7-11 in 4-6 oz.
FULL LOAD	TANK PSI	10-15 lbs	7-11 in 4-6 oz.	7-11 in 4-6 oz.

Natural Gas

	1	2	4
UNIT OFF	LINE PSI	7-11 in 4-6 oz.	7-11 in 4-6 oz.
STARTING	LINE PSI	7-11 in 4-6 oz.	7-11 in 4-6 oz.
NO LOAD	LINE PSI	7-11 in 4-6 oz.	7-11 in 4-6 oz.
FULL LOAD	LINE PSI	7-11 in. 4-6 oz.	7-11 in 4-6 oz.

Notice the preceding tables give two (2) different units of measuring fuel pressure. The first is with a pressure gauge calibrated in ounces per square inch. The second and most accurate is the use of a simple water manometer. A manometer is calibrated in inches of water column.

LP LIQUID WITHDRAWAL SYSTEMS

When installing a unit equipped the LP liquid withdrawal a primary regulator is not required on the supply tank. The supply line is connected to a liquid withdrawal valve on the supply tank and runs directly to the fuellock strainer mounted on the engine generator set. Normally a 3/8 to 1/2 inch copper line is acceptable for this type of fuel installation. You must be sure that the valve you have connected to on the supply tank is in fact a liquid supply valve and has a drop tube inside the tank that is pulling fuel from the bottom of the supply tank. Before starting the unit you must confirm that you have a good liquid supply at the unit. **Engine generator sets equipped for liquid withdrawal will not run properly when supplied with high pressure vapor fuel.**

LUBRICATION

Before starting the engine, check the oil level in the crankcase. If it is low, refill to the full mark with the proper weight/grade of oil as recommended by the engine manufacturer's maintenance instructions. The necessity of using the correct oil, and keeping the crankcase full cannot be over emphasized. Failure to use the proper oil and keep the crankcase properly filled will cause excessive engine wear and shorten its useful life.

COOLANT

Before starting the engine, check the coolant level in radiator. If it is low, refill as specified in the engine manufacturer's maintenance instructions. The radiator should be filled to about 1 inch below the filler neck. For additional information on engine coolant requirements see engine manufacturer's maintenance instructions.

INSTALLING THE BATTERY

****** CAUTION ******

In the following battery installation procedure, check to be sure the selector switch remains in the "stop" position. This should be your last step before initial start-up.

A customer supplied twelve-volt battery is required to complete the installation. Installation of the highest CCA rated battery, within the correct BCI group, will increase cold weather starting performance. *Gel batteries should not be used* with the battery tender installed in the generator enclosure.

Model	Voltage	BCI Group	MINIMUM CCA Rating
PSS21	12	24	650

Installation and servicing of batteries must be performed or supervised only by personnel knowledgeable of batteries and the required precautions. Keep unauthorized personnel away from batteries**.**

When installing or replacing batteries, use the proper group/size **starting** battery. The battery should be a Maintenance Free lead acid design. Deep cycle batteries will not work for this application.

CAUTION – PERSONAL DANGER

CAUTION - NEVER dispose of a battery in a fire. The battery is capable of exploding.

CAUTION - DO NOT open or mutilate the battery. Released electrolyte is known to be harmful to the skin and eyes and to be very toxic.

These engine generator sets are all **NEGATIVE** ground. Be very careful not to connect the battery in reverse polarity, as this may short circuit the battery charging system on the engine.

CAUTION – A battery presents a risk of electrical shock and high short circuit current. The following precautions must be observed when working with batteries.

1. Remove watches, rings and other metal objects.
2. Use tools with insulated handles.
3. Check both the battery cable ends and the battery posts to be sure they are free of corrosion.
4. Always connect the battery positive cable first and then connect the battery negative cable. When removing the battery cables from the battery reverse the procedure, disconnect the negative cable first and then the positive cable.
5. Be sure all connections are tight and coat the terminals and cable end with dialectic grease.

WARNING – The electrolyte is a diluted sulfuric acid that is harmful to the skin and eyes. It is electrically conductive and corrosive. The following precautions must always be taken.

* Always wear full eye protection and protective clothing.
* Where electrolyte contacts the skin, wash off immediately with water.
* If electrolyte contacts the eyes, flush thoroughly and immediately with water and seek immediate medical attention.
* Spilled electrolyte is to be washed down with an acid neutralizing agent. A common practice is to use a solution of one pound of bicarbonate of soda (baking soda) to one gallon of water. The bicarbonate of soda solution is to be added until the evidence of reaction, foaming, has ceased. The resulting liquid is to be flushed with water and the area dried.

DANGER – Explosive Fire Risk

* Never smoke when near batteries.
* Do not cause a flame or spark in the battery area.
* Always discharge static electricity from your body before touching batteries by first touching a grounded metal surface.

SERVICING BATTERIES

Batteries used on these units may over time lose water. This is especially true if you are using a trickle charger to maintain your battery. When refilling the battery with water use only distilled water. Tap water will shorten the service life of the battery.

Never fill the battery above the fill line. Over filling above the upper level line may cause the electrolyte to overflow, resulting in corrosion to the engine or nearby parts. Immediately wash off any spilled electrolyte following the procedure above.

NOTE: Always make sure that a new battery is fully charged before installing it on a generator set. Failure to do so can cause damage to the engine control module in the generator set.

All connections must be clean and tight. Check the electrolyte (fluid) in the battery periodically to be sure it is above the plates. Never allow the battery to remain in a discharged condition.

CONNECTING THE BATTERY CHARGER & BLOCKHEATER

A two-stage battery tender is provided on all standby generators. This battery tender charges at a rate of 750 mA until the battery is fully charged and then automatically switches to a 13.2 VDC float charger. The charger has an indicator light on it, red indicates it is charging, and green indicates it is in the storage mode (float charge). This charger is mounted on the engine generator set just below the engine control panel.

**** NOTICE ****
The trickle charger is not intended to recharge a battery which has become completely discharged. It is designed to produce just enough current to maintain a fully charged battery.

The battery tender receptacle is to be powered by a GFCI circuit and installed in accordance with the United States National Electric Code. These AC wires can be run in the same conduit as the other AC leads from the generator. It is suggested that this circuit be fused for 15 amps, then both the battery charger and the block heater can be connected to the same circuit. A 120 volt duplex receptacle is mounted on the generator along side circuit breaker panel, the battery tender is shipped already plugged into the receptacle.

The engine blockheater installed on this unit should also be plugged in this receptacle. The block heater is thermostatically controlled and when plugged in will maintain the engine coolant temperature between 100 and 120 degrees F.

MOUNTING THE AUTOMATIC TRANSFER SWITCH (A.T.S.)

****
******* WARNING *******
****

FIRE HAZARD - *All wiring must be done by a licensed electrician, and must conform to the national electrical code and comply with all state and local codes and regulations. Check with the local authorities before proceeding!*

INSTALLATION NOTES

Because of the many different types of service, feeder, and distribution equipment, no specific wiring instructions can be provided. It is recommended that only copper wire be used. In all cases it is essential that while the load is connected to the generator, there can be absolutely no feedback from the generator to the power line or the power line to the generator. When properly installed, the normal A.T.S. Control and safety systems will eliminate all paths for feedback.

To wire the automatic transfer switch into the existing wiring, first determine which circuits will be on the emergency load circuit. If the entire load is to be transferred, the transfer switch can be wired in directly after the watt-hour meter and the service entrance, providing the service entrance ampere rating is within the transfer switch's rated capability.

If only specific circuits are to be powered under emergency power failure conditions, an additional distribution panel designated "emergency distribution panel" must be installed.

All selected emergency circuits are removed from main distribution panels and installed in the emergency distribution panel. The A.T.S. is then installed between the main panel and the emergency distribution panel. Suggested circuits: freezer, refrigerator, furnace, emergency lights, sump pump, emergency outlet circuits, etc. Total running load must not exceed generator rating.

A.C. ELECTRICAL CONNECTIONS

NOTICE - CLASS 1 WIRING METHODS ARE TO BE USED FOR ALL FIELD WIRING CONNECTIONS TO TERMINALS OF A CLASS 2 CIRCUIT

Note: This symbol ⏚ always indicates ground where used.

INSTALLERS NOTE: ***To access the AC and DC interconnections on this unit, open the single door on the right hand side of the units. Then remove the safety panel covering the mainline circuit breaker. All connection are behind this panel.***

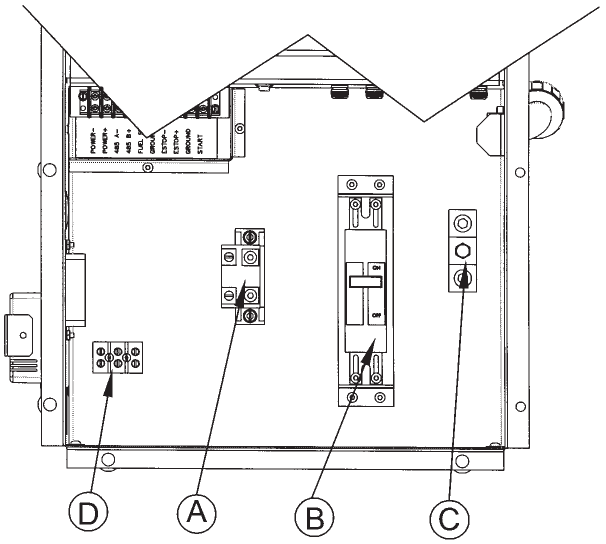

A - Neutral Lugs, These 100 amp neutral lugs are isolated from ground and provided for you to connect your neutral wire to from the transfer switch. The lugs will accommodate #12 AWG to #1/0 awg and should be torqued to 50 in. lbs.

B - Generator Circuit Breaker, This circuit breaker provides overload protection for the generator. Your power feeds from the transfer switch will connect to the bottom lugs on the circuit breaker. The generator power feeds have already been wired into the upper lugs.

The table below gives you the circuit breaker size, lug wire sizes and torque specification. (see the actual breaker for additional information and restrictions)

kW	Voltage	PH	Amp	Wire Capability	Lug Torque
21	120/240	1	89.0	#12 AWG -2/0 AWG	50 in lbs
22	120/208	3	76.4	#12 AWG -2/0 AWG	50 in lbs
22	120/240	3	66.2	#12 AWG -2/0 AWG	50 in lbs
25	277/480	3	37.6	#14 - #1/0 AWG	80 in lbs

Minimum Conductor Sizes between the Generator and the ATS. Based on wire type and temperature rating. Wire has been derated for 40° C ambient temperatures.

				Cu Conductor		Al Conductor	
			C/B	Wire Temperature Rating			
kW	Voltage	PH	Amp	75°C	90°C	75°C	90°C
21	120/240	1	90	#2 AWG	#3 AWG	1/0 AWG	#2 AWG
22	120/208	3	70	#3 AWG	#4 AWG	#2 AWG	#3 AWG
22	120/240	3	70	#4 AWG	#4 AWG	#2 AWG	#3 AWG
25	277/480	3	35	#8 AWG	#8 AWG	#8 AWG	#8 AWG

For additional information on wire sizing refer to table 310-16 of the National Electrical Code ANSI/NFPA 70.

C - Ground Lug, These ground lugs are bonded to ground and are provided for you to connect your ground wire to from the transfer switch. The lugs will accommodate #6 AWG to 250 MCM and should be torqued to 250 in. lbs.

D. 120 Volt Terminal Block, This terminal block is provided for the 120 volt/ 15 amp feed from customer's distribution panel for the block heater and the trickle charger.

****
***** **WARNING** *****
****

A main line circuit breaker has been provided inside the generator housing. During all wiring installations make sure the breaker is in the off position and the generator operation switch is in the off position.

****
***** **WARNING** *****
****

EQUIPMENT DAMAGE - *When installing a Three Phase 240 volt system be sure you know which lead is the high voltage "wild" leg (208 Volt line to neutral). The generator normally carries the high voltage on the G2 lead.*

The load current carrying wires (L) and (T) must be sized to handle the maximum load current without excessive voltage drop. By code, the wire must be heavy enough to handle the full current rating of the main line circuit-breaker (or fuse) in the entrance (or sub-panel) protecting the contactor switch.

All wires should be installed in rigid or flexible conduit. (Knockouts are provided in the control box).

See the manual shipped with the Automatic Transfer Switch for connection locations in the switch. Connections in each switch will vary depending on the type of switch and the manufacturer.

GROUNDING

A grounding lug has been provided on the engine generator set to grounded to earth ground if required. Check with your local codes. Generally a 6 foot copper rod driven into the earth will provide a proper earth ground.

D.C. ELECTRICAL CONNECTIONS

NOTE:

There are various DC connectors on the engine that have nothing connected to them. This was done intentionally, these connectors are for END OF LINE TESTING and other various diagnostic tests. They are not used during normal operations and can just be ignored.

All DC connections are completed on the terminal strip just below the engine control cabinet.

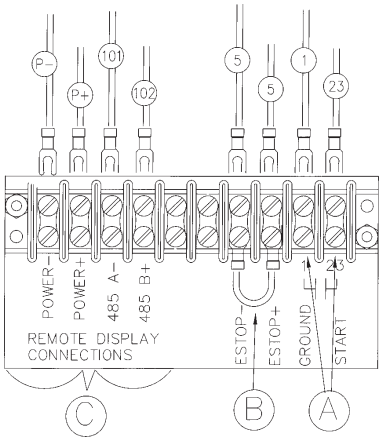

A - Customer Remote Start CONNECTIONS TERMINALS. The two remote start leads from the Automatic Transfer Switch are connected to the two terminals marked 1 & 23. The wire in terminal labeled #1 is Battery Negative and the wire in the terminal labeled #23 is your Remote Start lead. Closing these two leads together will signal the DSE 7310 to go into an auto-start mode and start up the engine generator.

Depending on the distance, 14 to 16 gauge stranded wire should be used. It is suggested that these wires be labeled S1 and S23. The terminal blocks are designed to use terminal lugs on all wires and the screws should be torqued to 9.6 in. lbs.

Note: Any relay closure can be used to start and stop this generator. As long as the contact stays closed the engine generator set will continue to run. Once the relay is opened the unit will shut down and remain in the standby mode until the remote start relay is closed again.

B - ESTOP- & ESTOP+. Remote Emergency Stop terminals. These two terminals are shipped with a jumper installed. If your application requires the installation of a Remote Emergency Stop switch, remove the jumper and wire your switch to these terminals. **This unit will not start and run without either the jumper installed or a remote N/C switch installed.**.

C - Remote Display Panel Interface Terminals. These interface terminals are prewired to allow for the connection of a remote display. This display allows for the remote annunciation of alarms at a location such as a nurses station or a control room. This display can be used to meet the remote annunciation requirements of NFPA 110 standards.

DC Interconnections to the Automatic Transfer Switch

Two control wires are required between the A.T.S. panel and the generator control terminal box. Depending on the distance, 14 to 16 gauge stranded wire should be used. These wires should be labeled S1 and S23.

****
***** **WARNING** *****
****

Be sure Engine Generator is in the "OFF" position before you make any DC interconnections.

**** **CAUTION** ****
Never run the AC and DC wiring in the same conduit.

Zenith ATS

The terminal markings in the Zenith ATS are marked "X1" and "X2". The wire labeled "Start 1" is routed to start contact "X1" and the wire labeled "Start 23" is routed to start contact "X2"

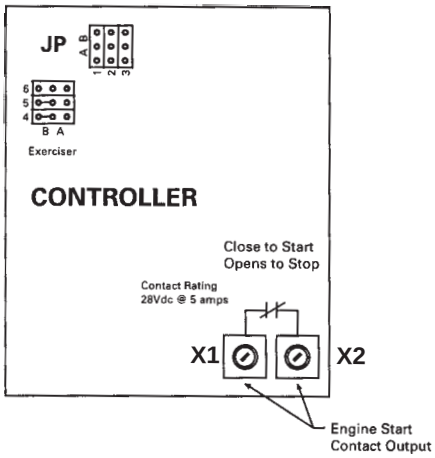

ASCO 165 UL SWITCH

Your DC connection points in the ASCO 165 ATS are terminals “4” and “5 on the interface terminal block.

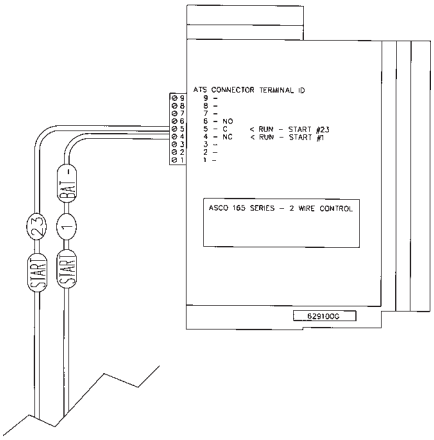

ASCO 300 UL SWITCH

Your DC connection points in the ASCO 300 ATS are terminals “14” and “15”. Depending on the size of the switch they are located in different locations. See next page:

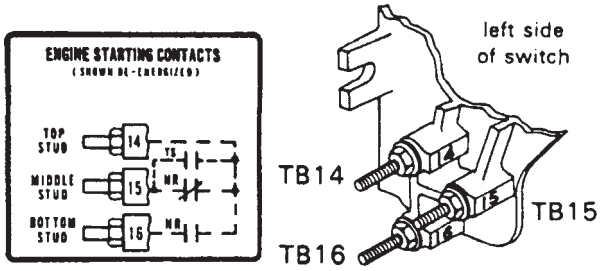

Engine starting contact label and location for 30 - 200 amp switches.

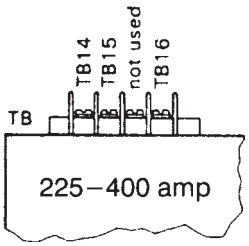

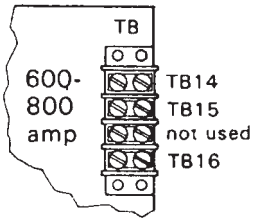

ENGINE CONTROL PANEL LAYOUT

A. USB PROGRAMMING PORT - USB port for computer interface. Used for programming the DSE7X10 controller.

B. DSE7X10 CONTROLLER - See controller explanation on follow page.

C. Emergency Stop Switch - When depressed this switch will disconnect all the 12 volt power to the DSE7X10 shutting the engine down. The display on the controller will annunciate “Emergency Stop”.

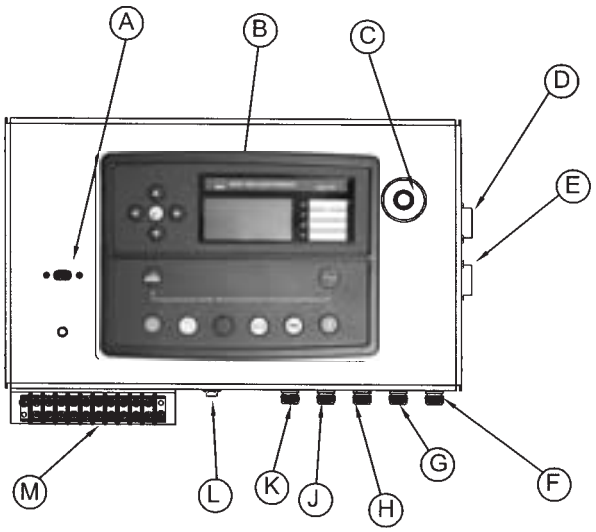

D. AC INTERFACE CONNECTOR - This connector is used to interface with the AC generator end. It provides the controller with the voltage, amperage and frequency reading for the display.

E. DC INTERFACE CONNECTOR - This connector provides all the interface connections for the engine. Including the DC power supply to operate the DSE7X10 controller. Engine CAN connections are also made through this connector providing the controller with the engine operational reading.

F. 10 AMP FUSE This fuse supplies the DSE7X10 controller 12 Volt DC for all controller functions. (Replacement AGC-10A-250V)

G. 3 AMP FUSE -This fuse is in the power supply for the DSE7X10 controller circuitry on the board. (Replacement AGC-3A-250V)

H, J, K. 2 AMP FUSE- These fuses are in the AC input line from the generator. These are the feeds that provide the AC voltage reading on the display. If one of these is blown the controller will not show the proper voltage on one leg and may shutdown for low voltage. (Replacement AGC-2A-250V)

L. FUEL SELECTOR SWITCH - This switch changes the engine operating fuel form NG (lwith the switch open) to LP (with the switch closed) This selector switch tells the engine ECU what fuel you are supplying. The engine ECU then makes the appropriate changes in the engine electronics to handle the fuel of your choice.

M. CUSTOMER REMOTE CONNECTIONS - See detail on pervious page.

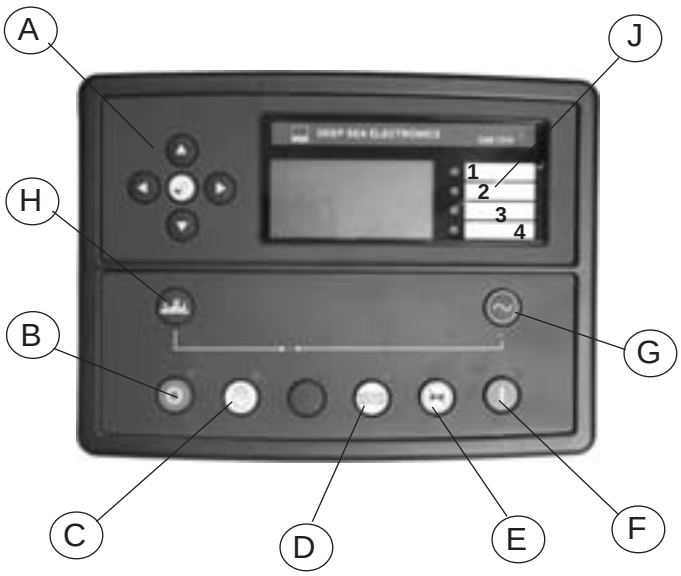

DSE 7X10 CONTROLLER

A. MENU NAVIGATION BUTTONS – Left and Right buttons select different grouping (i.e. Engine reading Generator reading, etc) Up and down buttons scroll through the different reading for each group.

B. STOP/RESET – This button places the module into its STOP/RESET mode. This will clear an alarm conditions for which the triggering criteria have been removed. If the engine is running and this button is pushed the module will shut off the fuel solenoid and the engine will come to a stop. If a remote start signal is received while this switch is activated, the unit will not start.

C. MANUAL - This mode allows manual control of the generator functions. Once in the MANUAL mode the module will allow you to start the unit using the START button. The unit will continue to run until either the STOP/RESET or AUTO button is pressed. If the unit receives a remote start signal during manual operation, the generator will remain running even after the remote start signal has been lost. You must use the STOP/RESET or AUTO button to stop the unit once you have started it in manual mode.

****** CAUTION ******

IF THE POWER FAILS WHILE RUNNING IN THE MANUAL MODE THE TRANSFER SWITCH WILL TRANSFER THE LOAD TO THE GENERATOR. TO PREVENT THIS THE MAINLINE CIRCUIT BREAKER ON THE GENERATOR MUST BE OPENED.

D. AUTO – This button places the module into its AUTOMATIC mode. This module will monitor the remote start input for a relay closure. When the remote start signal is received it will time out the start delay (5 Seconds) and then start the engine generator set. When the remote start signal is lost (relay opened up) the module will shut the engine generator set down after the cool down timeR has time out. The module will return to the auto start mode and await the next start signal.

E. LAMP TEST/HORN RESET - This button silences the audible alarm if it is sounding and illuminates all of the LEDs as a lamp test feature. When configured and fitted to a compatible engine ECU, pressing this button in STOP/RESET mode after pressing the START button (to power the ECU) will cancel any “passive) alarms on the engine ECU.

F. START – This button is active only in the MANUAL or STOP/RESET mode. Pressing this button in the MANUAL mode will start the engine locally for testing. The engine will continue to run until either the STOP/RESET or the AUTO button is pressed. Pressing this button with the control in the STOP/RESET mode will turn on the CAN engine ECU (when correctly configured and fitted to a compatible engine ECU)

G. CLOSE GEN-SET – NOT USED IN THIS APPLICATION

H. OPEN GEN-SET – NOT USED IN THIS APPLICATION

J. USER CONFIGURABLE INDICATORS –
1. Remote Start
2. Fuel Selection on for LP - off for NG.
3. Not Used.
4. Emergency Stop.

NOTE: STOP/RESET, MANUAL mode and AUTO mode buttons all have indicator lamps next to them to tell you what mode you are in. Pressing buttons out of sequence will cause the engine not to do what you may think it should be doing. See button operation sequencing above.

INITIAL START UP

****
******* WARNING *******
****

EQUIPMENT DAMAGE - *DO NOT jump start these engine generator sets. Starting these units on a low battery or jump starting them will cause damage to the engine control module.*

Use the following check list to verify correct installation before starting the engine:

Note: Roof access panels have been provided to check/fill the engine oil and the coolant. Side panels may be removed by removing the thumb screws on the bottom under side of each panel.

1. Engine oil. Fill as required with proper grade/qty.
2. Engine coolant. Fill as required with proper mixture.
3. Unit mounting base properly bolted down.
4. Clearance for service and maintenance on all sides.
5. Proper fuel line material and size.
6. All fuel line connections tight.
7. Fuel line protected and a moisture trap installed (may be required for N.G.).
8. Correct LP/NG pressure 4-6 Oz. (7-11" Wc).
9. Battery connections clean and tight.
10. Battery fully charged.
11. All AC and DC wiring installed and properly protected.

After completing the above checklist, the engine-generator set is ready for the initial start-up test.

STARTING PROCEDURE

MANUAL MODE

****
***** WARNING *****
****

EQUIPMENT DAMAGE - BEFORE ATTEMPTING TO START THIS UNIT COMPLETE YOUR PRESTART CHECKLIST AND INSURE THE GENERATOR MAINLINE CIRCUIT BREAKER IS IN THE PROPER POSITION PRIOR TO STARTING. STARTING THIS UNIT WITHOUT IT PROPERLY CONNECTED CAN CAUSE SERIOUS PERSONAL INJURY OR EQUIPMENT DAMAGE.

1. Depress the manual mode button on the control panel. The small LED light next to it should come on.

2. Press the start button- The DSE7310 will send a start signal to the ECU on the engine. The engine ECU will then energize the fuel solenoid and start the cranking cycle (10 seconds on and 10 seconds off).

NOTE: There is no start delay in this mode of operation.

If the engine fails to start during this cranking period the starter motor is disengaged and goes into a rest mode after which a second attempt is made to start the engine. Should this sequence continue through 3 cranking cycles the start sequence will be stopped and the display will show 'FAILED TO START'.

All engine functions are controlled by the ECU on the engine. The ECU on the engine will send information signals to the DSE7310 via the CAN connections to indicate oil pressure, water temperature, etc for the display on the engine control.
All shutdown functions are also controlled by the ECU on the engine, what you see displayed on the DSE7310 display is what is happening inside the ECU on the engine.

The AC output readings displayed on the DSE7310 are collected through the AC interface harness wired in the generator control box. An shutdowns related to the AC output are not a function of the engine ECU but are based on information collected in the DSE7310 via this AC harness.

4. During manual operation the load will not normally be applied to the generator. But caution must be used, if the line power should fail or be turned off to the transfer switch during manual operation the load may be applied to the generator.

With the engine running smoothly check the no load voltage and frequency on the digital display. The voltage should be 208/240/480 AC depending on which model you have and a frequency of 59.5 To 60.5 hertz (Hz).

If you have the proper voltage at the generator the next step is to check the voltage at the generator terminals in the Automatic Transfer Switch. The voltage between the G1 and the G3 terminals should be the same as it was on the generator front panel. The voltage should also be checked between the hot terminals (G1 and G3) and the G-N to be certain of a balanced voltage output and a solid neutral connection. The voltage between G1 and G-N should be about 120 volts AC (277 on 480 units). The same approximate voltage should be found between terminals G3 and G-N (120 volts AC).

On three phase panels the G2 voltage level should also be checked. ON 240 VOLT (DELTA) SYSTEMS BE SURE YOU KNOW WHERE THE HIGH VOLTAGE "WILD" LEG IS. IT MUST BE IN THE SAME LOCATION ON THE LINE SIDE AS IT IS ON THE GENERATOR SIDE. (i.e. if it's on L-3 on the line side it must be on G-3 on the generator side.

**** Notice ****
If for any reason during the check out procedure the voltage and frequency are not correct, depress the STOP/RESET button and correct the trouble before proceeding.

5. Stopping – There are two ways to stop the unit when it is in the manual mode. Pressing the STOP/RESET button will stop the unit immediately. Pressing the AUTO mode button will stop the unit but only after the cool down timers have timed out and there is no remote start signal being sent to the unit.

AUTO MODE

To activate the automatic start mode you will just need to depress the AUTO button, the LED indicator beside the button confirms that the unit is in automatic start mode.

To test the automatic start Transfer Switches follow the instruction in the operator's manual you received with your transfer switch. If you get a fault light during the initial start up or prior to start up it is most likely a false warning light. Simply reset the ATS and start over.

Once you have completed testing of the ATS, be sure you ALWAYS leave the system in standby mode unless servicing the unit. For standby operation, press the AUTO button on the front of the engine control. The green light should light up next the AUTO button.

SETTING THE EXERCISER CIRCUIT

For all ATS see the instruction manual shipped with the ATS for instruction on setting the exercise circuit in your ATS.

TROUBLESHOOTING TABLES

UNIT WILL NOT CRANK WHEN THE POWER FAILS

1. DSE Controller not in "AUTO".
2. Transfer control switch not in "AUTOMATIC" position.
3. Incorrect wiring between transfer switch and generator.
4. Blown fuses on engine control box.
5. Defective DSE Control.
6. Loose or dirty battery terminals.
7. Defective auto start controller in the transfer switch.
8. Defective starter.
9. Defective start solenoid.
10. Defective ECU on engine.

ENGINE WILL NOT CRANK WITH GENERATOR RUN PUSH-BUTTON DEPRESSED

1. Battery dead.
2. Blown fuses engine control.
3. Defective DSE Control.
4. Loose or dirty battery terminals.
5. Defective starter.
6. Defective start solenoid.
7. Locked up engine genset.
8. Defective ECU on the engine.

ENGINE CRANKS BUT WILL NOT START

1. Improper fuel pressure being delivered to unit.
2. Fuel supply shut off.
3. Fuel tank empty.
4. Defective spark plug.
5. Defective engine ignition module.
6. Dirty air cleaner filter.
7. Defective fuel solenoid valve.
8. Low battery.
9. Defective fuel regulator.
10. Defective ECU on the engine.

ENGINE STARTS AND THEN STOPS AND ALARM LIGHT COMES ON

1. Engine is low on oil.
2. Engine has high water temperature.
3. Engine has overspeed.
4. Engine has gone into overcrank.
5. No output from engine alternator to engage stop crank circuit.
6. Generator is not operating at the correct speed.
7. Defective ECU on the engine.

ENGINE WILL NOT COME UP TO SPEED AFTER IT STARTS

1. Insufficient fuel volume getting to the unit.
   a. Too small of fuel line.
   b. Fuel pressure too low/high.
2. Defective ECU on the engine.
3. Governor is defective.
4. AC short in generator components.

ATS PANEL WILL NOT TRANSFER TO EMERGENCY SUPPLY (GENERATOR)

1. No AC generator output from generator.
2. Defective transfer switch controller.
3. Incorrect voltage or frequency from the generator.
4. Wiring error between generator and transfer switch.
5. Defective mechanically switching solenoid in Automatic Transfer Switch.
6. Improper phase rotating.
7. Main line breaker on generator open/defective.

ATS PANEL WILL NOT RETRANSFER TO NORMAL POWER

1. Proper normal line power not available at line terminals in ATS panel.
2. Defective transfer switch controller.
3. Defective mechanically switching solenoid in Automatic Transfer Switch.
4. Retransfer delay still timing out.

NO AC OUTPUT FROM GENERATOR

1. Defective diode.
2. Defective voltage regulator.
3. Defective rotor.
4. Defective stator.
5. Defective exciter rotor.
6. Defective exciter stator.
7. AC short in the output leads.
8. Defective field circuit breaker.

CHANGING THE FUEL TYPE

****** CAUTION ******

EQUIPMENT DAMAGE - *Do not make any fuel adjustments or governor adjustments until all pressure readings are in compliance with specification. See fuel pressure charts (tables 1, 2, and 3).*

These engine/generator sets are very easy to convert between LP or NG. As the engine timing is controlled by the ECU on the engine you only need to tell the ECU what fuel you are operating on. A small rocker switch has been provide on the underside of the engine control cabinet (see ref G on Page 9) for this purpose.

Opening the rocker switch will tell the ECU mounted on the engine that you are operating on NG Fuel. Closing the rocker switch will tell the ECU that the fuel being supplied is LP. The ECU will then reprogram the engine to operate on the proper fuel.

VOLTAGE REGULATOR WIRING
THREE PHASE AND SINGLE PHASE

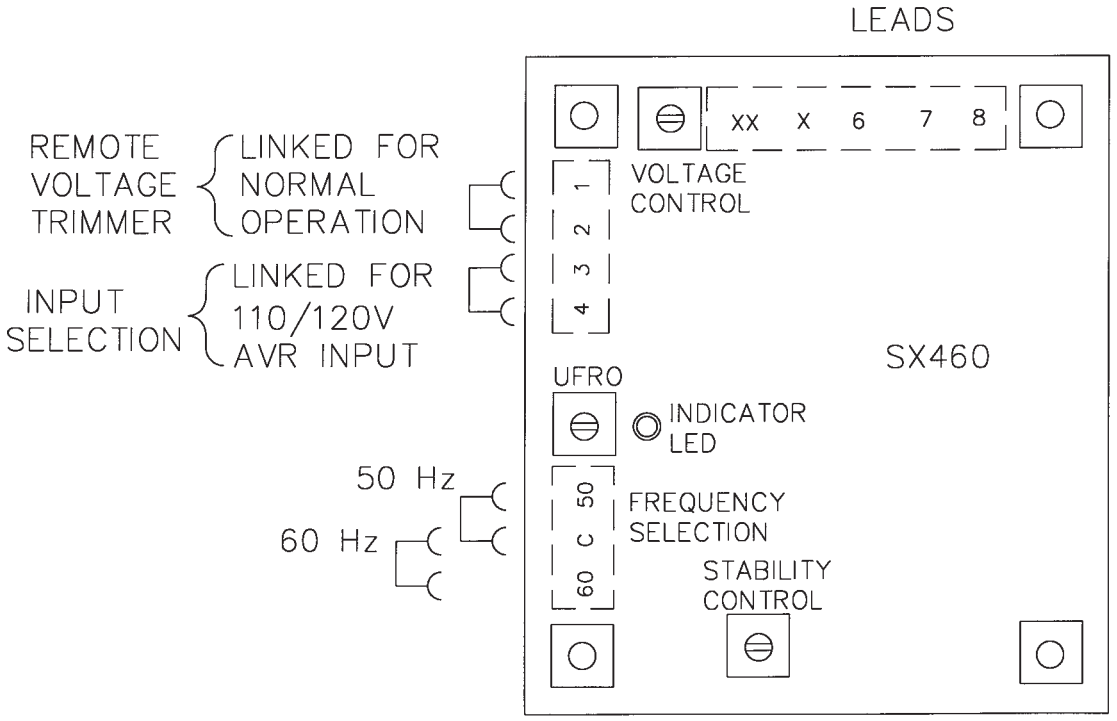

THREE PHASE AC WIRING
HIGH AND LOW WYE

THREE PHASE-HIGH WYE
277/480 VOLTS

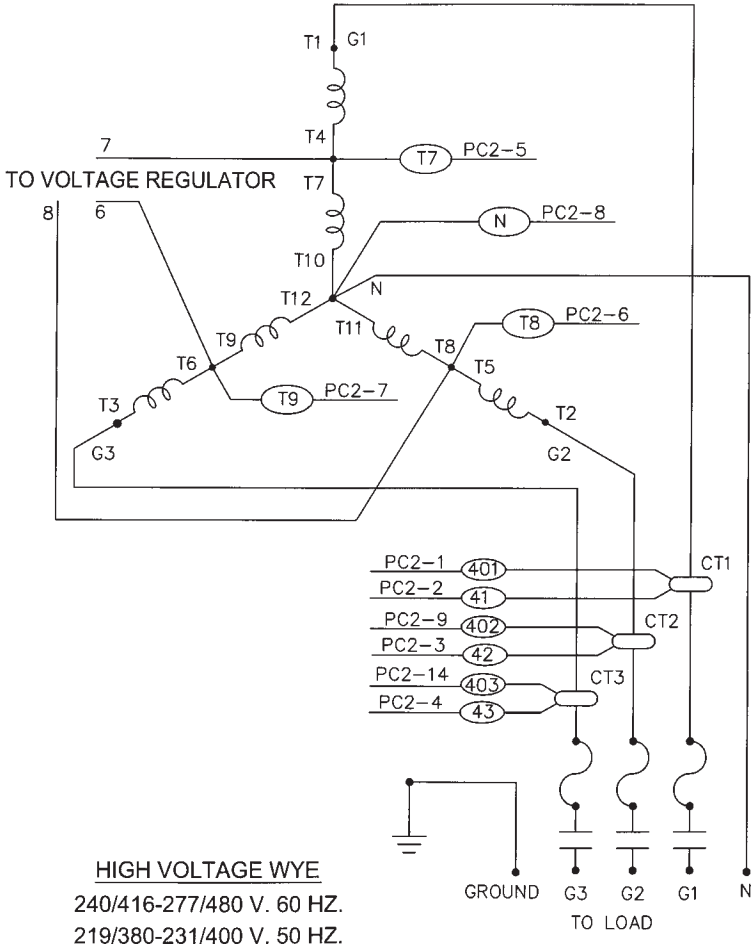

HIGH VOLTAGE WYE
240/416-277/480 V. 60 HZ.
219/380-231/400 V. 50 HZ.

THREE PHASE-LOW WYE
120/208 VOLTS

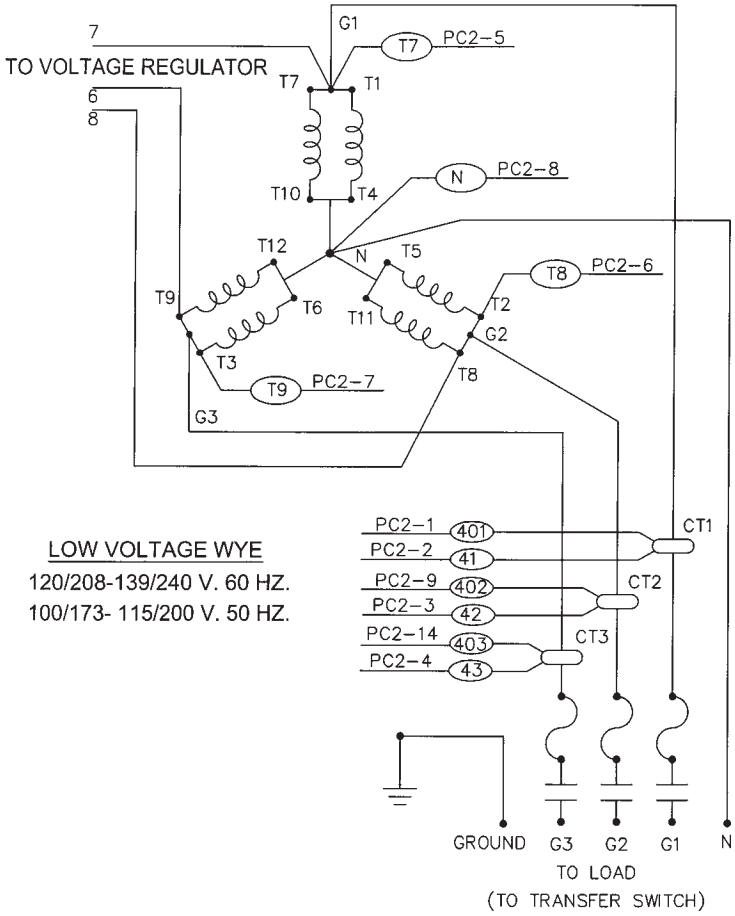

LOW VOLTAGE WYE
120/208-139/240 V. 60 HZ.
100/173- 115/200 V. 50 HZ.

THREE PHASE AC WIRING - DELTA
SINGLE PHASE AC WIRING

SINGLE PHASE
120/240 VOLTS

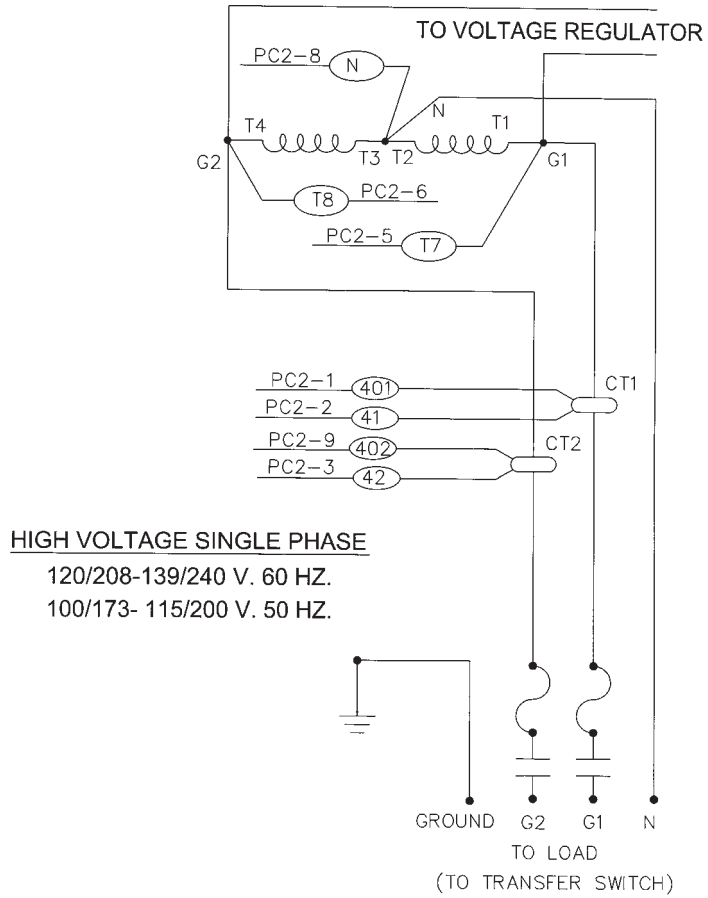

THREE PHASE -DELTA
120/240 VOLTS

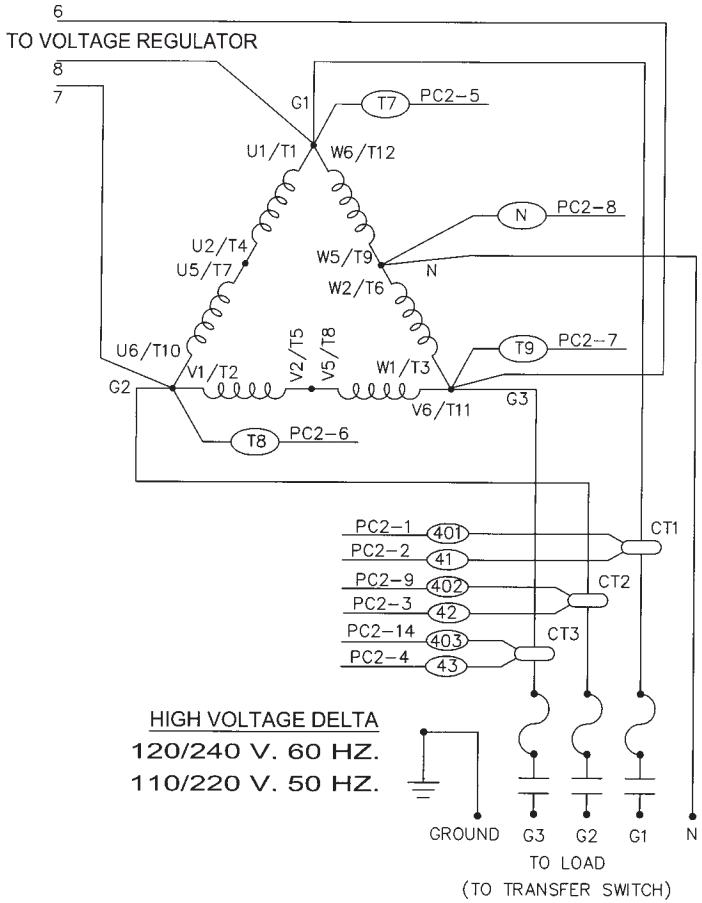

DC SCHEMATIC

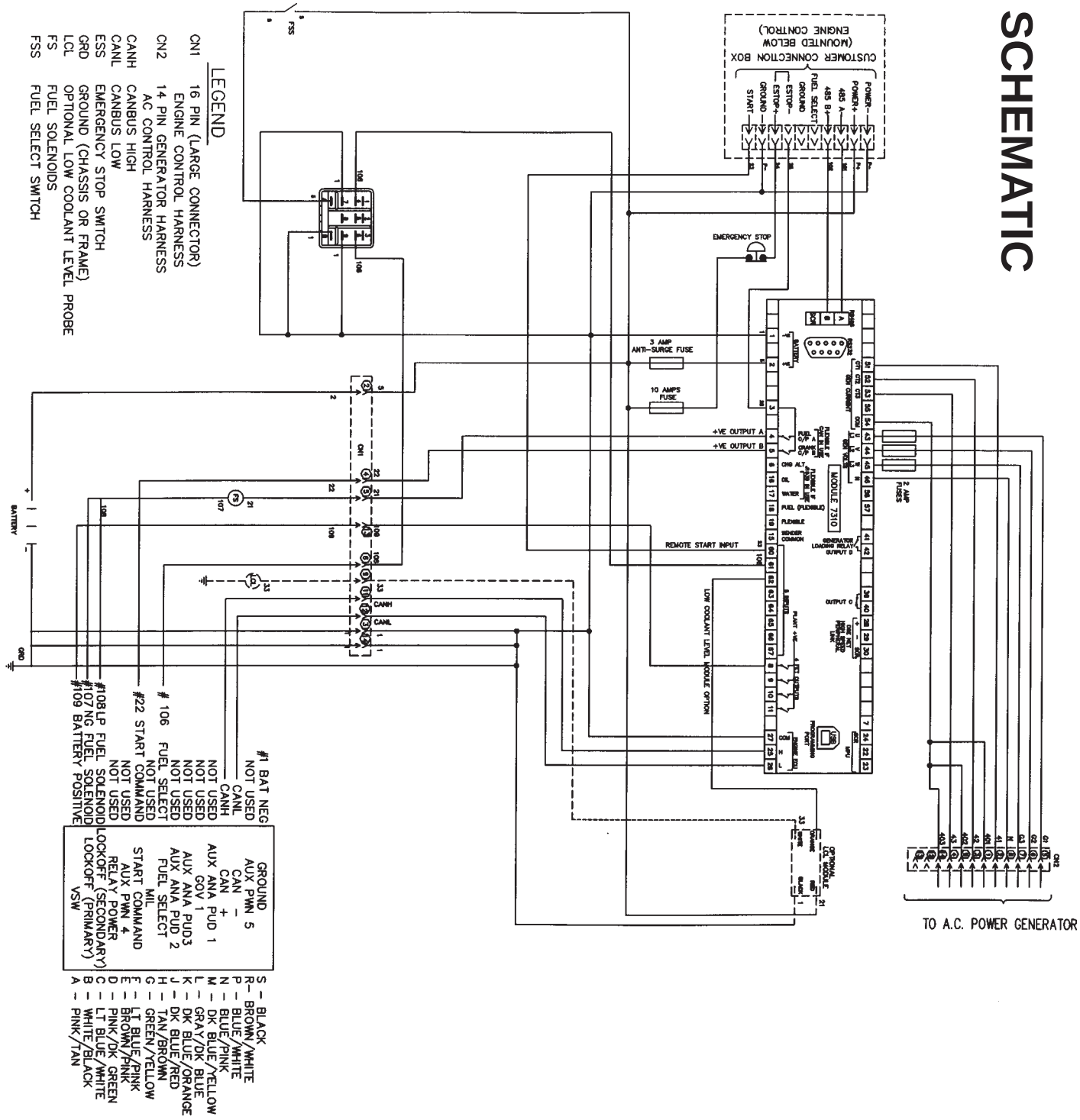

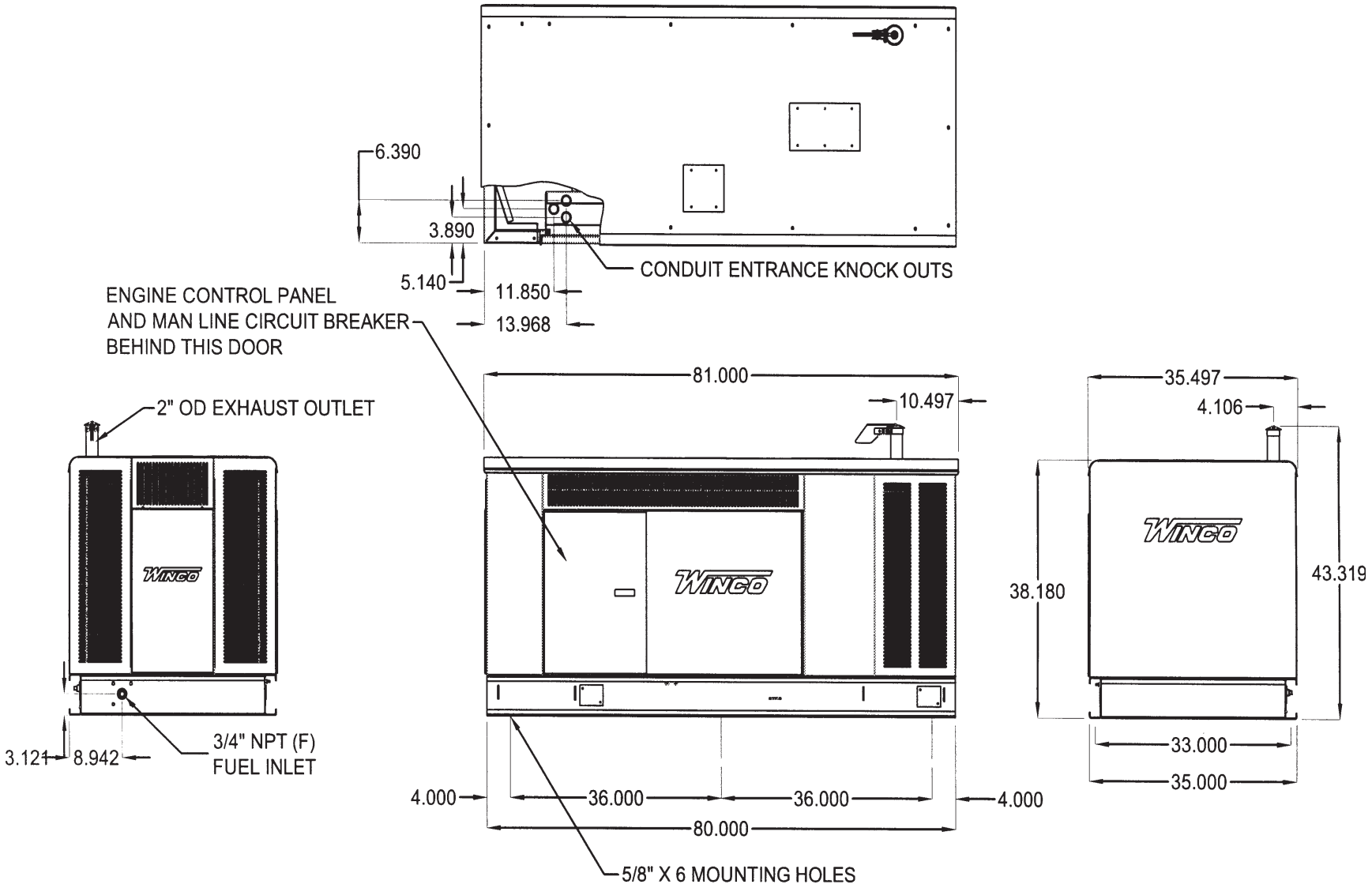

PSS21 OUTLINE DRAWING AND WIRING ENTRANCE

DIMENSIONS ARE SUBJECT TO CHANGE. ALWAYS OBTAIN A CERTIFIED DRAWING FOR CONSTRUCTION PURPOSES.

MODE ICONS

An icon is displayed in the mode icon area of the display to indicate what mode the unit is currently in.

Icon	Graphic	Details
Stopped		Appears when the engine is at rest and the unit is in stop mode.
Auto		Appears when the engine is at rest and the unit is in auto mode.
Manual		Appears when the engine is at rest and the unit is in manual mode/
Timer animation		Appears when a timer is active, for example cranking time, crank rest etc.
Running animation		Appears when the engine is running, and all timers have expired, either on or off load. The animation rate is reduced when running in idle mode.
Front panel editor		Appears when the unit is in the front panel editor.

AUTO RUN ICONS

When the engine is running in AUTO mode, an icon is displayed to indicate the reason for the set being run.

Auto run reason	Icon
Remote start input	
Low battery run	
Scheduled run	
Mains failure	

INSTRUMENTATION ICONS

Icon	Graphic	Details
Generator		Used for generator voltage and generator frequency
Mains		Used for mains voltages and mains frequency
Engine speed		Engine speed instrumentation screen
Hours Run		Hours run instrumentation screen
Battery voltage		Battery voltage instrumentation screen
Engine temperature		Coolant temperature instrumentation screen
Oil pressure		Oil pressure instrumentation screen
Flexible sensor		Flexible sensor instrumentation screen
Event log		Appears when the event log is being displayed
Unit time		Current time held in the unit
Scheduler setting		The current value of the scheduler run time and duration
CAN DTC		ECU diagnostic trouble codes
Generator Current		Generator current instrumentation screen

WARNING ALARMS

Warnings are non-critical alarm conditions and do not affect the operation of the generator system, they serve to draw the operators attention to an undesirable condition.

In the event of an alarm the LCD will jump to the alarms page, and scroll through all active warnings and shutdowns.

Warning alarms are self-resetting when the fault condition is removed.

Display		Reason
	Battery High Voltage	The DC supply has risen above the high volts setting level for the duration of the high battery volts timer
	Battery Low Voltage	The DC supply has fallen below the low volts setting level for the duration of the low battery volts timer
ECM	CAN ECU Warning	The engine ECU has detected a warning alarm and has informed the DSE module of this situation. The exact error is also indicated on the module's display.
	Charge Alternator Failure	The auxiliary charge alternator voltage is low as measured from the W/L terminal.
A	Digital Input A-D	Auxiliary Digital inputs can be user configured as Digital inputs and will display the relevant icon.
A	Analogue Input A-C	Auxiliary Analogue inputs can be user configured as Digital inputs and will display the relevant icon.
	Fail To stop	The module has detected a condition that indicates that the engine is running when it has been instructed to stop. **NOTE:- 'Fail to Stop' could indicate a faulty oil pressure sensor - If engine is at rest check oil sensor wiring and configuration.**
V	Generator High Voltage Warning	The generator output voltage has risen above the pre-set pre-alarm setting.
V	Generator Low Voltage Warning	The generator output voltage has fallen below the pre-set pre-alarm setting after the *Safety On* timer has expired.
	High Coolant Temperature Warning	The module detects that the engine coolant temperature has exceeded the high engine temperature pre-alarm setting level after the *Safety On* timer has expired.
	Low Oil Pressure Warning	The module detects that the engine oil pressure has fallen below the low oil pressure pre-alarm setting level after the *Safety On* timer has expired.
	Low Fuel Level	The module detects that the fuel level is below the configured setting
Hz	Over Frequency Warning	The generator output frequency has risen above the pre-set pre-alarm setting.
	Over Speed Warning	The engine speed has risen above the overspeed pre alarm setting
Hz	Under Frequency Warning	The generator output frequency has fallen below the pre-set pre-alarm setting after the *Safety On* timer has expired.
	Under Speed Warning	The engine speed has fallen below the underspeed pre alarm setting
	Flexible Sensor	The flexible sensor warning alarm has been triggered.

SHUTDOWN ALARMS

Shutdowns are latching alarms and stop the Generator. Clear the alarm and remove the fault then press Stop/Reset to reset the module.

NOTE:- The alarm condition must be rectified before a reset will take place. If the alarm condition remains, it will not be possible to reset the unit (The exception to this is the Low Oil Pressure alarm and similar 'delayed alarms', as the oil pressure will be low with the engine at rest).

Display		Reason
CAN	CAN ECU Data Fail	The module is configured for CAN operation and does not detect data on the engine Can datalink, the engine shuts down.
ECM	CAN ECU Shutdown	The engine ECU has detected a shutdown alarm and has informed the DSE module of this situation. The exact error is also indicated on the module's display.
A	Digital Input A-D	Auxiliary Digital inputs can be user configured as Digital inputs and will display the relevant icon.
A	Analogue Input A-C	Auxiliary Analogue inputs can be user configured as Digital inputs and will display the relevant icon.
	Emergency Stop	The emergency stop button has been depressed. This is a failsafe (normally closed to battery negative) input and will immediately stop the set should the signal be removed. **NOTE:- The Emergency Stop Negative signal must be present otherwise the unit will shutdown.**
	Fail To Start	The engine has not fired after the preset number of start attempts
V	Generator High Voltage Shutdown	The generator output voltage has risen above the preset level
V	Generator Low Voltage Shutdown	The generator output voltage has fallen below the preset level
	High Coolant Temperature Shutdown	The module detects that the engine coolant temperature has exceeded the high engine temperature shutdown setting after the *Safety On* timer has expired.
	Loss of Mag. Pickup Signal	The speed signal from the magnetic pickup is not being received by the DSE controller.
	Low Oil Pressure Shutdown	The engine oil pressure has fallen below the low oil pressure trip setting level after the *Safety On* timer has expired.
	Low Fuel Level	The module detects that the fuel level is below the configured setting
Hz	Over Frequency Shutdown	The generator output frequency has risen above the preset level
	Over Speed Shutdown	The engine speed has exceeded the pre-set trip
Hz	Under Frequency Shutdown	The generator output frequency has fallen below the preset level
	Under Speed Shutdown	The engine speed has fallen below the pre-set trip after the ***Safety On*** timer has expired.
	Temperature sensor open circuit	Temperature sensor has been detected as being open circuit.
	Oil pressure sensor open circuit	Oil pressure sensor has been detected as being open circuit.
	Flexible Sensor	The flexible sensor shutdown alarm has been triggered.
	Magnetic pickup open circuit	Magnetic pickup sensor has been detected as being open circuit.

ACCESSING THE FRONT PANEL CONFIGURATION

Ensure the engine is at rest and the module is in STOP mode by pressing the Stop/Reset button.

Press the Stop/Reset and Info buttons simultaneously

EDITING A PARAMETER

Enter the editor as described above

Press the (left) or (right) buttons to cycle to the section you wish to view/change.

Press the (up or down) buttons to select the parameter you wish to view/change within the currently selected section.

To edit the parameter, press to enter edit mode. The parameter begins to flash to indicate that you are editing the value.

Press the (up or down) buttons to change the parameter to the required value.

Press to save the value. The parameter ceases flashing to indicate that it has been saved.

To exit the editor at any time, press and hold the button

NOTE: - When the editor is visible, it automatically closes after 5 minutes of inactivity to ensure security.

NOTE: - Values representing pressure are displayed as Bar, kPa and PSI. Values representing temperature are displayed as degrees Celsius and Degrees Farenheit.

WINCO INC®

A Division of DTI Dyna Technology Inc

12 MONTH LIMITED WARRANTY

WINCO, Incorporated warrants to the original purchaser for 12 months or 1000 hours which ever occurs first, that goods manufactured or supplied by it will be free from defects in workmanship and material, provided such goods are installed, operated and maintained in accordance with WINCO written instructions.

WINCO's sole liability, and Purchaser's sole remedy for a failure under this warranty, shall be limited to the repair of the product. At WINCO's option, material found to be defective in material or workmanship under normal use and service will be repaired or replaced. For warranty service, return the product within 12 months or 1000 hours which ever occurs first from the date of purchase, transportation charges prepaid, to your nearest WINCO Authorized Service Center or to WINCO, Inc. at Le Center Minnesota.

THERE IS NO OTHER EXPRESS WARRANTY.

To the extent permitted by law, any and all warranties, including those of merchantability and fitness for a particular purpose, are limited to 12 months or 1000 hours which ever accurs first, from date of purchase. In no event is WINCO liable for incidental or consequential damages.

Note: Some states do not allow limitation on the duration of implied warranty and some states do not allow the exclusion or limitation of incidental or consequential damages, so the above limitations may not apply in every instance. This warranty gives you specific legal rights which may vary from state to state.

WINCO reserves the right to change or improve its products without incurring any obligations to make such changes or improvement on products purchased previously.

EXCLUSIONS:

WINCO does not warrant Engines. Engines are covered exclusively by the warranties of their respective manufacturers, see enclosed warranties.

WINCO does not warrant Batteries, or Other Component Parts that are warranted by their respective manufacturers.

WINCO does not warrant modifications or alterations which were not made by WINCO, Inc.

WINCO does not warrant products which have been subjected to misuse and/or negligence or have been involved in an accident.

WINCO INC®
A Division of DTI Dyna Technology Inc
225 South Cordova
Le Center Mn 50657
507-357-6831
www.wincogen.com

60706-197- 0210-00