NORTH STAR
Proven Performance

M1572081J.1

ITEM NUMBER: 1572081, 1572082, 1572091, 1572092
SERIAL NUMBER: _____

Owner's Manual
Cold Water, Belt Drive Pressure Washer
Instructions for Installation/Set-up, Operation, Maintenance, & Storage

This pressure washer produces cold water high pressure spray. Cleaning chemicals may be incorporated into the spray if desired. The pressure pump for this equipment is powered by a gasoline internal combustion engine.

⚠ WARNING: SPECIAL HAZARDS

- **CO Poisoning:** Exhaust from engine contains carbon monoxide, a poisonous gas that can cause carbon monoxide poisoning and possible death if inhaled. ONLY run pressure washer OUTDOORS and at least 20 feet from the home, away from windows, vents and air intakes, to allow proper ventilation. If you start to feel sick, dizzy, or weak while using the pressure washer, shut off the engine and get to fresh air RIGHT AWAY.
- **Injection Injury**: High-pressure spray can pierce skin and underlying tissues, leading to serious injury and possible amputation. Such an injection injury can result in blood poisoning and/or severe tissue damage.
- **Flying Debris**: High-pressure spray can cause flying debris and possible surface damage.
- **Slips/Falls**: Spray discharge can cause puddles and slippery surfaces. Spray-gun kickback can cause operator loss of balance and falls.
- **Electric shock**: Operating equipment in wet conditions or near water can cause electric shock.
- **Chemical Exposure:** Cleaning chemical vapors or contact with skin may be hazardous.
- **Fire/Explosion:** Engine sparking can ignite fuel or other flammable liquids or vapors in the vicinity. Hot exhaust from engine can ignite combustible materials.
- **Burns**: Pressure Washer pump and engine are hot surfaces that can cause burn injuries.

Detailed safety information about these hazards appears throughout this manual.

Equipment Protection Quick Facts

Inspect Upon Delivery: FIRST! Inspect for missing or damaged components. See *"Initial Set-Up"* section for where to report missing or damaged parts.
Add Engine Oil: Engine is shipped **without oil**. See engine manual for instructions on capacity and viscosity recommendations.
Replace Temporary Pump Oil Plug: Pump is shipped **with** oil but with a temporary shipping plug. Check pump oil level before starting and replace temporary shipping plug with permanent oil fill plug provided within plastic bag containing this Owner's Manual.
Battery Required: A battery is not included. A battery must be installed before starting the engine or damage to the engine voltage regulator will result. Purchase a standard 12 VDC, 18 Ah lawn and garden battery (Group U1-7).
Water Flow Requirements: Make sure your supply water flow rate is 20% higher than the pressure washer's flow rate (see "Specifications" section for detail), and that your water is clean and particle free.
Chemical Spraying: Use only approved pressure washer chemicals designed for high-pressure use. Use chemical adjustment knob to regulate cleaning power (on select units).
Storage: Do not allow water to freeze in the pump, hose, or spray gun(s). See "Storage" for more information.
Maintenance Schedule: Engine, pump, and belts require periodic inspection and servicing to keep pressure washer functioning efficiently. See "*Maintenance Schedule Summary*" for frequency of servicing.

Any Questions, Comments, Problems, or Parts Orders
Call NorthStar Product Support 1-800-270-0810

Table of Contents

Equipment Protection Quick Facts 1

TABLE OF CONTENTS 2

ABOUT YOUR PRESSURE WASHER 4

SPECIFICATIONS 5

COMPONENT IDENTIFICATION 6

SAFETY 7

Hazard Signal Word Definitions 7

SAFETY LABELING 8

Safety Decal Locations 8

Safety Decals 9

INITIAL SET-UP 10

Step 1. Inspect & Unpack 10

Components: 10

Hardware Bag: 11

Step 2. Assembly 12

Prepare Water Pump: 13

Battery Installation 13

Step 3. Select Suitable Location 14

Elevating or lowering your pressure washer 14

Outdoor Use Only 14

Install Spark Arrestor (if Required) 15

OPERATION 16

Follow Safety Rules for Operation 16

Preparing for Operation 17

Check/Add Oil to Pump 17

Check/Add Engine Oil 17

Inspect Fuel System/Check for Leaks 18

Connect Hoses, Water Supply, and Spray Nozzle 19

Attach High Pressure Hose to Water Outlet 20

Prime the Water Supply 21

Start-Up Procedures 22

Start the Engine to Power the Pump. 22

Apply Cleaning Chemical (If Desired) 23

Begin High Pressure Spray 23

Shutdown 24

STORAGE 25

Between-Use Storage 25

Prepare Pressure Washer for Freezing Conditions 25

Prepare Engine for Long Term Storage 26

Prepare Pressure Washer for Storage 26

MAINTENANCE & REPAIR 27

MAINTENANCE SCHEDULE SUMMARY 27

DETAILED INSTRUCTIONS – MAINTENANCE & REPAIR 27

Follow Safety Rules 27

Keep Pressure Washer Clean 27

Inspect Spray System 28

Clean Inlet Filter 28
Check Tire Pressure 28
Change Pump Oil 28
..... 28
Drive Belt Maintenance 29
TROUBLESHOOTING 30
PARTS EXPLOSION- MODEL #1572081, 1572082, 1572091, 1572092-REV J.1 31
PARTS EXPLOSION- MODEL #1572081, 1572082, 1572091, 1572092-REV J.1 32
PUMP ASSEMBLIES 33
PUMP EXPLODED VIEW- NSB4540 (A1572081) 34
PUMP EXPLODED VIEW- NSSHFB6030 (A1572082) 36
PUMP EXPLODED VIEW- NSB5050 (A1572091) 38
PUMP EXPLODED VIEW- NSSHFB7035 (A1572092) 40
LIMITED WARRANTY 42

About Your Pressure Washer

Thank you for purchasing a NorthStar Pressure Washer! It is designed for long life, dependability, and top performance.

Intended Use. Produce a high-pressure water spray. Incorporate cleaning chemicals into a low-pressure water spray.

> Note: Do not use for other purposes, as unforeseen hazards or equipment damage may result.

Gasoline powered pressure washers are for OUTDOOR USE ONLY. Be sure to read about site selection for running this pressure washer in the "**Initial Set-up**" section of this manual.

Water Supply. The pump requires a clean, standard tap water supply provided through a garden hose at a flow rate of at least 6 gallons per minute. The use of a backflow preventer on the water supply hose is recommended and may be required by local code. Any cleaning chemicals that are used must be specifically approved for use in pressure washers.

Power Source. The pressure washer is powered by a gasoline engine.

Supplies Required. Normal operation will require you to supply:

- Pressure Washer pump oil
- Gasoline
- Engine oil
- 12-Volt standard lawn and garden battery
- Personal Protection Equipment

See "*Specifications*" section of this manual for more detail.

Site Location. Intended for outdoor use only.

Personal Protection. Wear safety apparel during operation, including safety glasses with side and top protection. Ear protection is also recommended if working near any operating engine. Other safety apparel includes waterproof insulated gloves, safety glasses with side and top protection, and non-slip protective footwear. Cleaning chemicals may require the use of respiration mask; refer to chemical label for further instruction.

Adult control only. Only trained adults should set up and operate the pressure washer. Do not let children operate.

Under The Influence. Never operate, or let anyone else operate, the pressure washer while fatigued or under the influence of alcohol, drugs, or medication.

⚠ WARNING: Read this Manual

Carefully read and follow all instructions and safety information for using this pressure washer. Improper use or maintenance of the pressure washer can result in ***serious injury or death*** to the operator or bystanders.

ATTENTION: Rental Companies and Private Owners who loan this equipment to others!

All persons to whom you rent/loan this pressure washer to must have access to and read this manual. Keep this owner's manual with the pressure washer at all times and advise all persons who will operate the machine to read it. You must also provide personal instruction on how to safely set-up and operate the pressure washer and remain available to answer any questions a renter/borrower might have. Owner's Manuals are available from NorthStar at 1-800-270-0810.

Specifications

1572081	
FLOW OUTPUT	
PSI (bar)	4000 (276)
GPM (l/min)	4.5 (17)
Max Water Temp	140° F (60°C)
ENGINE	
Engine	Briggs Vanguard
Displacement (cc)	479 cc
DIMENSIONS/COMPONENTS	
Length	34”
Width	32.75”
Height	30”
Pump Model	NorthStar B4540
Pump Oil Capacity	26.88 oz.
SUPPLIES REQUIRED (not included)	
Engine Oil	Refer to engine owner’s manual
Pump Oil (Shipped with Oil, but refills required)	Universal Tractor Transmission Oil (part # COCP2101) or Mobil 1 Synthetic Oil 15W50
Battery	12 Volt, 18 amp (Group U1-7)

1572082	
FLOW OUTPUT	
PSI (bar)	3000 (207)
GPM (l/min)	6 (22.7)
Max Water Temp	140° F (60°C)
ENGINE	
Engine	Briggs Vanguard
Displacement (cc)	479 cc
DIMENSIONS/COMPONENTS	
Length	34”
Width	32.75”
Height	30”
Pump Model	NorthStar SHFB5030
Pump Oil Capacity	26.88 oz.
SUPPLIES REQUIRED (not included)	
Engine Oil	Refer to engine owner’s manual
Pump Oil (Shipped with Oil, but refills required)	Universal Tractor Transmission Oil (part # COCP2101) or Mobil 1 Synthetic Oil 15W50
Battery	12 Volt, 18 amp (Group U1-7)

1572091	
FLOW OUTPUT	
PSI (bar)	5000 (345)
GPM (l/min)	5 (18.9)
Max Water Temp	140° F (60°C)
ENGINE	
Engine	Honda GX660
Displacement (cc)	660 cc
DIMENSIONS/COMPONENTS	
Length	33.75”
Width	34”
Height	32.25”
Pump Model	NorthStar B5050
Pump Oil Capacity	35.84 oz.
SUPPLIES REQUIRED (not included)	
Engine Oil	Refer to engine owner’s manual
Pump Oil (Shipped with Oil, but refills required)	Universal Tractor Transmission Oil (part # COCP2101) or Mobil 1 Synthetic Oil 15W50
Battery	12 Volt, 18 amp (Group U1-7)

1572092	
FLOW OUTPUT	
PSI (bar)	3500 (241)
GPM (l/min)	7 (26.5)
Max Water Temp	140° F (60°C)
ENGINE	
Engine	Honda GX660
Displacement (cc)	660 cc
DIMENSIONS/COMPONENTS	
Length	33.75”
Width	34”
Height	32.25”
Pump Model	NorthStar SHF7035
Pump Oil Capacity	35.84 oz.
SUPPLIES REQUIRED (not included)	
Engine Oil	Refer to engine owner’s manual
Pump Oil (Shipped with Oil, but refills required)	Universal Tractor Transmission Oil (part # COCP2101) or Mobil 1 Synthetic Oil 15W50
Battery	12 Volt, 18 amp (Group U1-7)

Component Identification

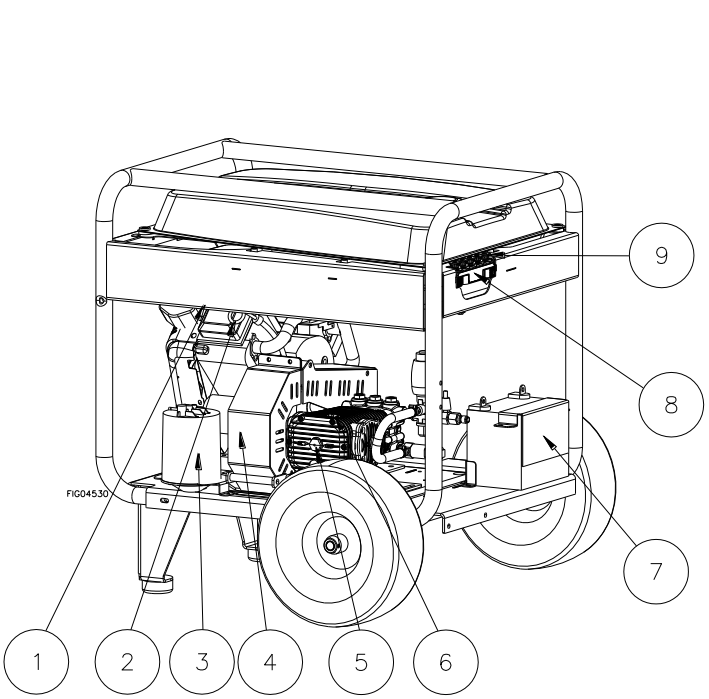

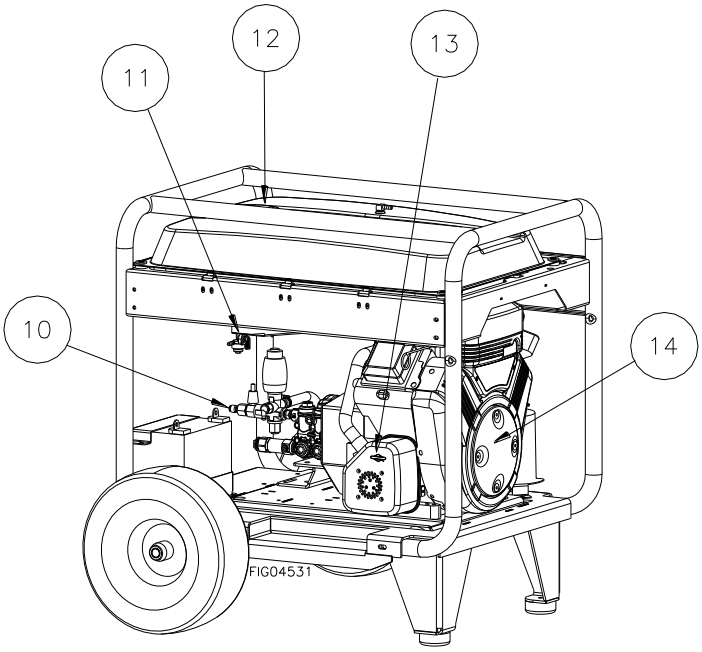

1. **Engine Oil Fill.** Use included funnel to add engine oil to unit.
2. **Oil Dipstick.** Check engine oil level.
3. **Carbon Canister.** Prevents gasoline vapors from exiting the fuel system.
4. **Belt Guard.** Guards against accidental contact with moving parts.
5. **Pump Oil Sight Glass.** Fill pump oil to middle of the sight glass.
6. **Pump Oil Fill.** Add pump oil here. Replace shipping plug with vented dipstick.
7. **Battery.** Storage place to house the battery. *(Not included, customer to purchase separately)*
8. **Nozzle Holder.** Removable device that will clip on your belt and stores nozzles.
9. **Nozzles.** Change nozzles for different spray patterns.
10. **Water Outlet.** Connect high pressure hose here.
11. **Fuel Shutoff Valve.** Turn fuel shut-off valve to OFF position before transporting or servicing the pressure washer.
12. **Gas Tank and cap.** Fuel storage container and cap.
13. **Muffler.** An acoustic device installed onto the exhaust system that is designed to reduce noise.
14. **Engine.** The air-cooled engine powers the pump.

See "*Parts Explosion*" for more details

Safety

Hazard Signal Word Definitions

This is the safety alert symbol. It is used to alert you to potential personal injury hazards. Obey all safety messages that follow this symbol to avoid possible injury or death.

⚠ DANGER

DANGER (red) indicates a hazardous situation, which if not avoided, will result in death or serious injury.

⚠ WARNING

WARNING (orange) indicates a hazardous situation, which if not avoided, could result in death or serious injury.

⚠ CAUTION

CAUTION (yellow), used with the safety alert symbol, indicates a hazardous situation, which if not avoided, could result in minor or moderate injury.

CAUTION

CAUTION (yellow), without the safety alert symbol, is used to address practices not related to personal injury.

NOTICE

NOTICE is used to address practices not related to personal injury.

Safety Labeling

Safety Decal Locations

⚠ WARNING:

ALWAYS make sure safety labels are in place and in good condition. If a safety label is missing or not legible, order new labels from NorthStar Product Support at 1-800-270-0810.

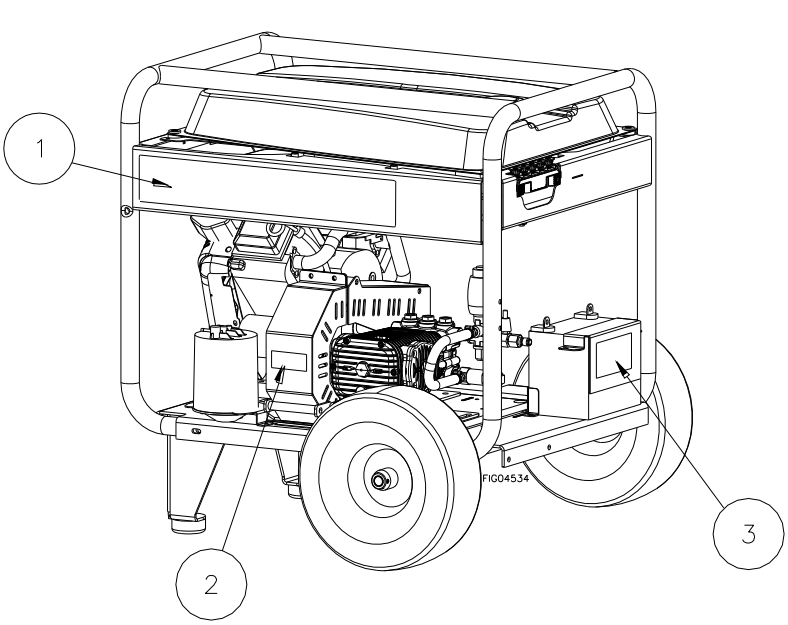

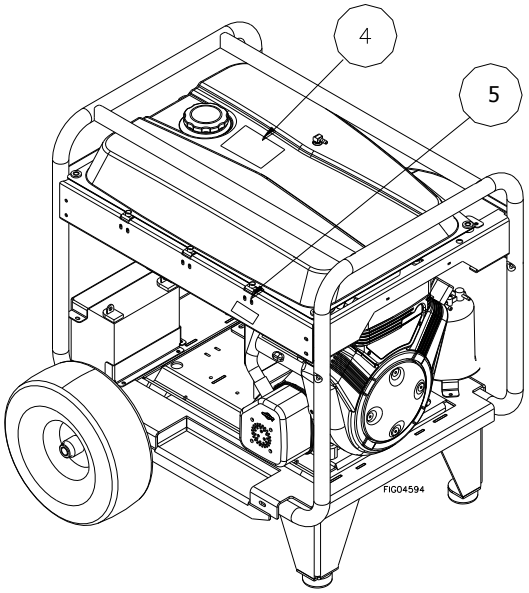

On-Product Warning Labels		
Location	**Part numbers**	**Description**
1	788915	Operating Instructions with Warnings
2	786632	Rotating Machinery
3	782397	Battery Hazard
4	786837	Fire/Overheating/Overfill
5	786635	Burn Hazard

Safety Decals

1

2

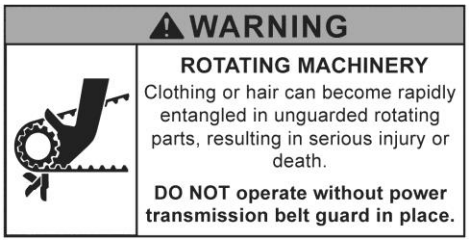

3

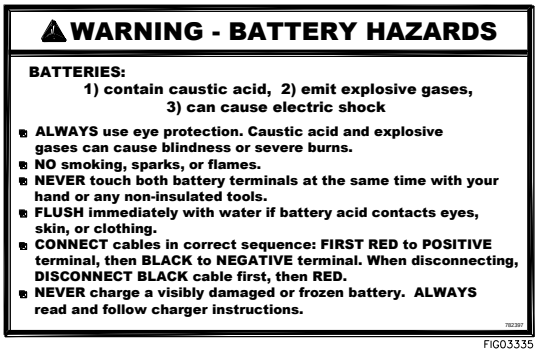

FIG03335

4

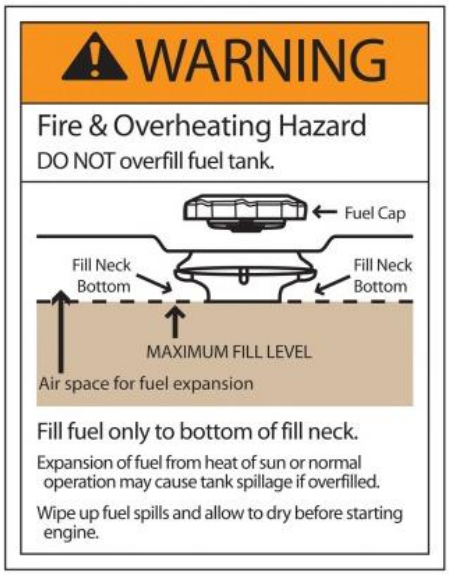

5

To order replacement safety labels, call NorthStar Product Support at 1-800-270-0810.

Initial Set-Up

Step 1. Inspect & Unpack

Upon receipt for missing or damaged parts. Verify that it is the pressure washer you ordered.

See *"Component Identification"* section of this manual for a diagram of the pressure washer and its components.

- For missing or damaged components, contact Product Support at 1-800-270-0810.
- If complete, fill out product serial number information. See *"Limited Warranty"* section of this manual.

Components:

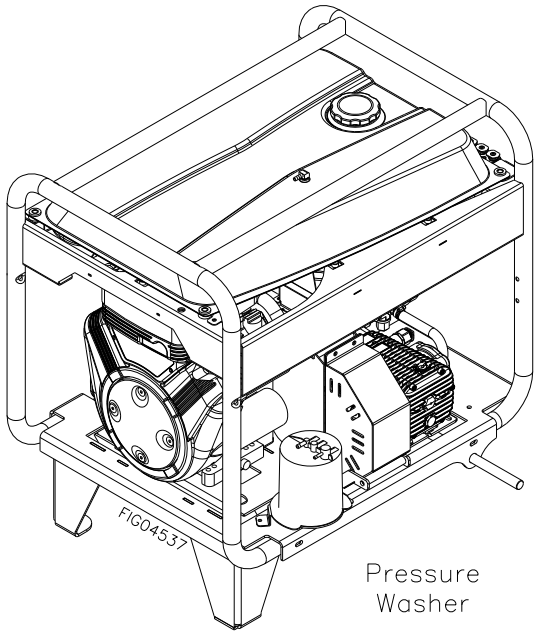

Pressure Washer

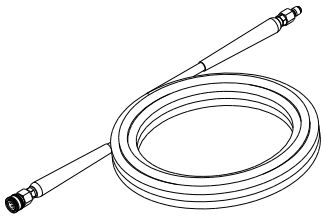

Hose

Spray Gun Wand

Lance Extension

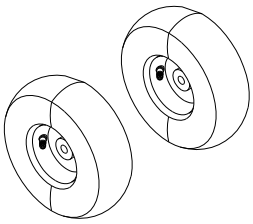

Wheels

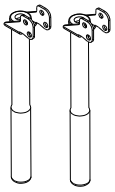

Handles

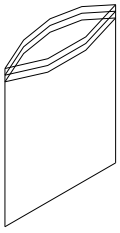

Hardware Bag

Hardware Bag:

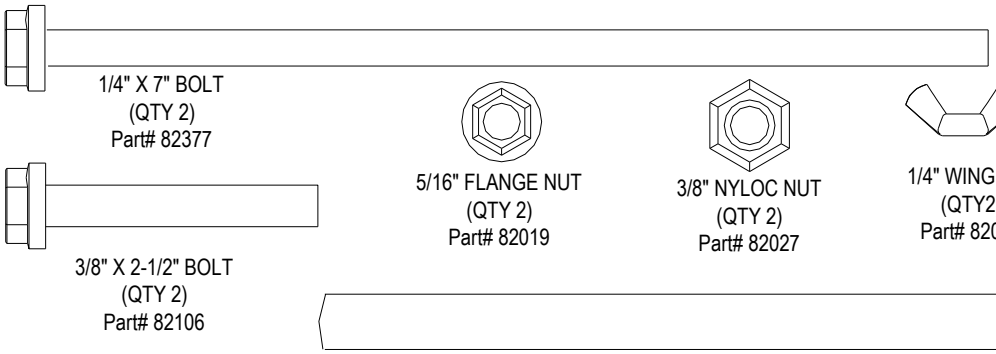

1/4" X 7" BOLT
(QTY 2)
Part# 82377

5/16" FLANGE NUT
(QTY 2)
Part# 82019

3/8" NYLOC NUT
(QTY 2)
Part# 82027

1/4" WINGNUT
(QTY2)
Part# 82083

3/8" X 2-1/2" BOLT
(QTY 2)
Part# 82106

1/2" X 6" REINFORCED PVC HOSE
(QTY 1)
Part# 30160

5/16" X 1" BOLT
(QTY 2)
Part# 82016

3/8" COTTERLESS PIN
(QTY 2)
Part# 38070

5/16" FLAT WASHER
(QTY 10)
Part# 82021

1/4" X 3/4" SELF TAPPER
(QTY 2)
Part# 82232

FUNNEL
(QTY 1)
Part# 785290

WHEEL RETAINER
(QTY 2)
Part# 305200

BUMPER
(QTY 2)
Part# 2215

LARGE BUMPER
(QTY 2)
Part# 15431

SPARK ARRESTOR
(QTY 1)
Part# 781341
1572091/1572092

6" LANYARD
(QTY 2)
Part# 786756

FIG04827

GRIP
(QTY 2)
Part# 30747

NOZZLE
(QTY 5)
Model# 1572081-Part# 25455
Model# 1572082-Part# 779544
Model# 1572091-Part# 25455
Model# 1572092-Part# 788767

VENTED
DIPSTICK
CO3200005100

BATTERY TIE PLATE
(QTY 1)
Part# 787620

NOZZLE HOLDER
(QTY 1)
Part# 788696

CHEMICAL INJECTOR HOSE AND
STRAINER
(QTY 1)
Part#777165

Step 2. Assembly

Note: Remove contents from pallet and assembly can occur at this time.

1. Install wheel onto axle using a 5/32" allen wrench.

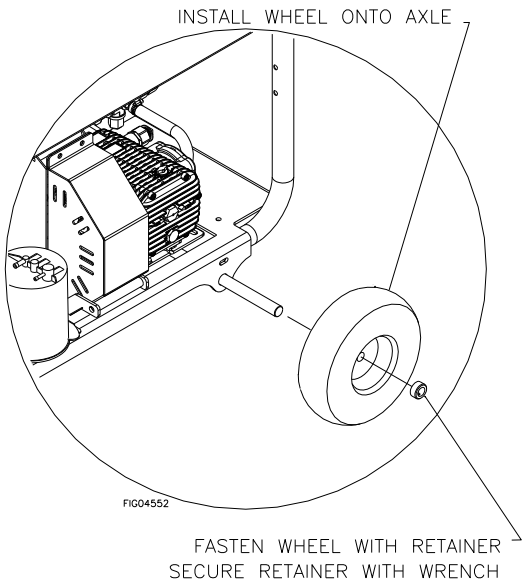

2. Install Nozzles into Nozzle Holder, Install Nozzle Holder onto Frame and Install Rubber Feet.

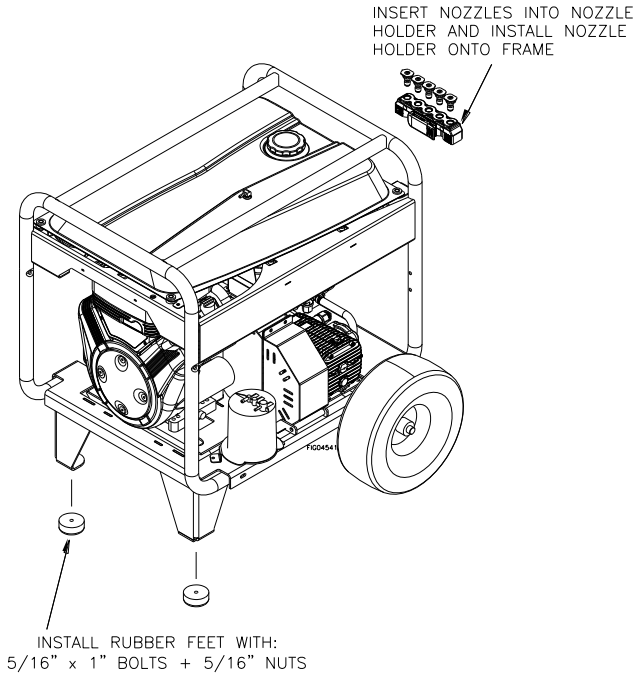

3. Install grip onto handle
4. Attach small bumper to handle with ¼" x ¾" self-tapper.
5. Insert (1) 3/8" x 2-1/2" bolt through (1) flat washer and through one end of lanyard as shown below. Attach 3/8" cotterless pin to other end of lanyard.
6. Install handle to pressure washer using 3/8" x 21/2" bolt, (4) flat washers and (1) 3/8" nyloc nut until washers press against tube walls. Repeat to for both sides.
7. Insert cotterless pin through bottom hole of arm so handle doesn't fold up while in use.

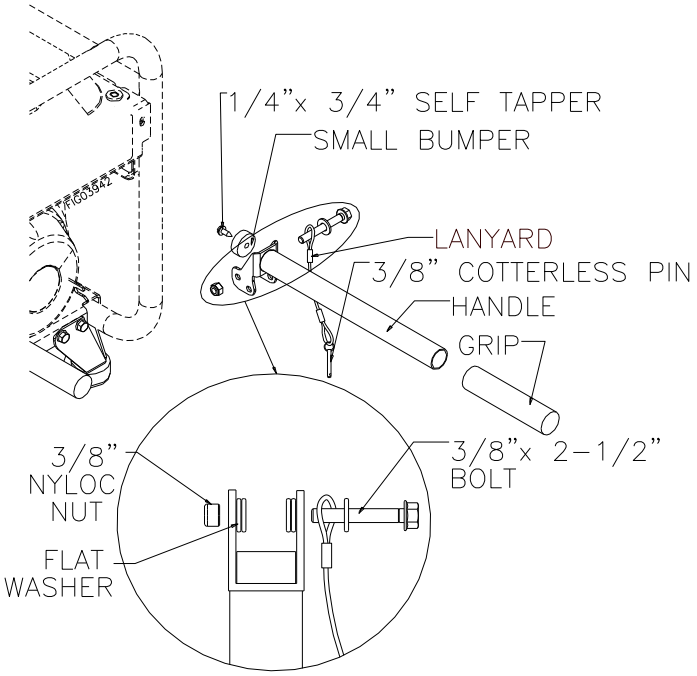

⚠ WARNING: High Pressure Fluid Injection Hazard

High-pressure fluid discharge from leaks (even pin-sized) or ruptured components can pierce skin and inject fluid into the body. Injection injury can result in blood poisoning and/or severe tissue damage leading to infection, gangrene, and possibly amputation.

- Never use a finger or skin to check for leaks.
- Never operate machine with damaged or missing hoses/parts.
- Never attempt to repair a high-pressure hose or component – Always replace it with a part that is rated at or above the pressure rating of this machine.

Prepare Water Pump:

1. Verify pump oil level.
   *Note: The pump is shipped **with** oil.*
   a. Remove shipping plug and install vented dipstick.
   b. Verify that oil level is half way up the sight glass (or at the indicator line on the dip stick).
2. If oil level is low, fill using the type of pump oil specified below. See the "Specifications" section of this manual to determine the type of pump that came equipped with this pressure washer.

Pump	Oil Type
NorthStar	• Universal Tractor Transmission Oil (part # COCP2101) • Mobil 1 Synthetic oil 15W-50

3. Replace oil fill cap.

1572081 & 1572082

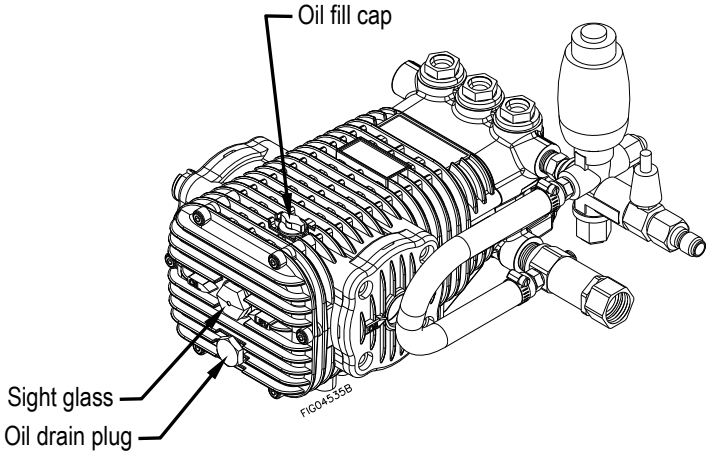

1572091 & 1572092

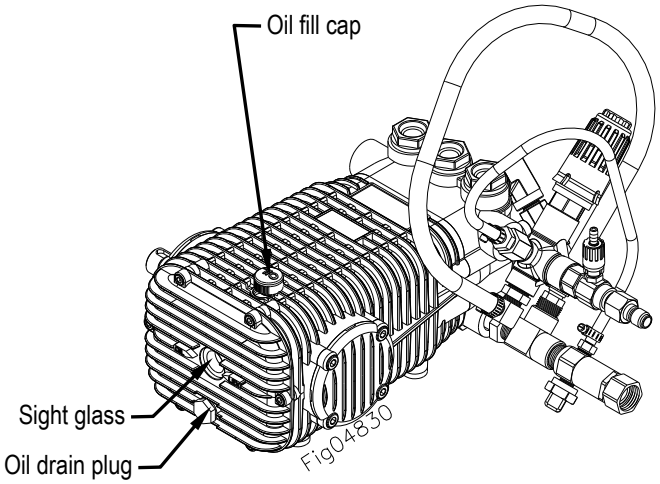

Prepare Engine

1. Fill engine with oil.
   *Note: Engine is shipped **without** oil. You must add oil before first use.*
   a. Refer to Engine Manual to locate oil-fill port and for instructions on filling. Use the oil grade and quantity specified in the Engine Manual.
   b. Low oil shutdown feature on 1572081 & 1572082 prevents the engine from starting without sufficient oil.

⚠ WARNING: Burn Hazard

Never open oil port while engine is running. Hot oil can spray over face and body.

Battery Installation

1. Install a 12-volt standard lawn and garden battery (Group U1-7) with a minimum of 18 amp hour rating. The engine will NOT run unless a battery is installed.

   • The battery is to be supplied by the customer and should be installed in the protective battery compartment located near the engine.

2. Following the steps below for connecting and disconnecting the battery:

⚠ WARNING: Battery Hazards

Batteries are hazardous because they contain caustic acid, can emit explosive gases, and can cause electric shock. Caution must be exercised when making connections to a battery to avoid shock and contact with the acid, and to prevent any sparking that could lead to an explosion. ALWAYS follow the general battery safety rules and instructions.

General Battery Safety Rules

- ALWAYS use eye protection and protective clothing when handling batteries.
- NEVER smoke or work near sparks or other sources of ignition.
- NEVER touch both battery terminals at the same time with your hand or any non-insulated tools.

If battery acid contacts skin or clothing, flush immediately with water and neutralize with baking soda.

Connecting the Battery
Always connect the cables in the following sequence to avoid possible shock:

a. Find the battery cables located inside the battery compartment.
b. Connect the ***red*** cable to the ***positive*** **(+)** terminal of the battery.
c. Then connect the ***black*** cable to the ***negative*** **(-)** terminal of the battery.
d. Reinstall the battery strap before using the pressure washer.

Disconnecting the Battery
Always disconnect cables in the following sequence to avoid possible shock.

a. First, disconnect the ***black*** cable from the ***negative*** **(-)** terminal of the battery.
b. Next, disconnect the ***red*** cable from the ***positive*** **(+)** terminal of the battery.
c. Remove the battery from the battery compartment.
d. Reinstall the battery strap.

Step 3. Select Suitable Location

Moving and Handling

Moving your pressure washer around

- Use the handles to manually move the pressure washer.
- Pull the pressure washer behind you has you walk.
- To turn, lift slightly on the handles and pivot the pressure washer on the back wheels.

⚠ WARNING: Lifting hazard

The pressure washer is heavy. It can crush and cause serious injury if it rolls out of control or tips over. Follow the instructions below for safely moving the pressure washer.

⚠ WARNING: Location hazards

Choose a suitable site for operating your pressure washer to prevent possible death from carbon monoxide poisoning or injury from fire/explosion, hot surfaces or equipment tip-over.

Elevating or lowering your pressure washer

- To reduce risk of injury, it is recommended that two adults lift the pressure washer.
- Only lift the pressure washer by the bumper and handle. Do not use the pump or engine as a lifting point.

Outdoor Use Only

Select a suitable outdoor location:

- Away from all building windows and air intakes.
- Where no flammable vapors, dusts, and gases are present.
- Where there is adequate, unobstructed ventilation airflow.
- Away from dusty/dirty conditions.
- With adequate clearance from combustible materials.
- On a firm, level, heat-resistant surface with good drainage.

1. Never run the pressure washer in an enclosed or partially enclosed location such as a building, garage, barn, shed, or house. These spaces can trap poisonous gases. Running a fan or opening windows will not provide adequate ventilation to prevent dangerous CO build-up.
2. Only use the pressure washer outdoors and at least 20 feet from the home, away from windows, vents and air intakes, to allow proper ventilation. If you start to feel sick, dizzy, or weak while using the pressure washer, shut off the engine and get to fresh air RIGHT AWAY.
3. Place the pressure
4. washer so that the exhaust fumes will not be directed towards people or building air intakes.
5. Do not locate and use the pressure washer in the presence of flammable vapors, dust, gases, or other potentially combustible materials.
6. Ensure that working, battery-operated or battery back-up carbon monoxide alarms are used in any dwelling/structure that is in close proximity to the running pressure washer.
7. Note that this pressure washer is NOT designed or approved for use in vehicles or marine applications. Never run the pressure washer inside RVs or other vehicles, on boats, or on pick-up truck beds.

Positioning:

1. The pressure washer should be positioned on a firm, level (less that 3 degree slope), heat-resistant surface with good drainage and a nearby water supply.
2. The pressure washer should be placed within garden hose distance of a continuous water supply. Ensure that the pressure washer sits level and will not slide or shift during operation. If

applicable, block the pressure washer's wheels to prevent movement.

3. Situate so there is adequate pulling room for starting the engine using the recoil starter. Attempting to pull at an odd angle could rip off grip cord and/or cause muscular injuries to the operator.

Airflow:

1. Situate so there is adequate clearance around pressure washer to allow for airflow – at least 7 feet from any non-combustible wall or obstruction.
2. Do not operate with a tarp, blanket, or cover surrounding the machine.
3. Do not place any objects against or on top of the unit.
4. The pressure washer needs adequate, unobstructed flow of air to allow for proper combustion and adequate cooling. Proper combustion can only be obtained when there is a sufficient supply of oxygen available for the amount of fuel being burned. Cooling ventilation is required to prevent overheating of the pressure washer and possible fire.

Exhaust:

⚠ WARNING: Exhaust Modification hazard

Never attempt to attach ductwork to the muffler system to allow for installation inside an enclosure. This could cause heat build-up and increased exhaust back-pressure, resulting in possible exhaust leakage or damage to the pressure washer.

1. The exhaust gas from your pressure washer is extremely hot and can cause combustible materials to catch on fire.
2. Make sure the engine is at least 7 feet from all combustible materials and structures during operation.
3. Keep a fire extinguisher rated "ABC" nearby. Keep it properly charged and be familiar with its use.
4. Place the unit so that the exhaust fumes will not be directed towards people or building air intakes.

⚠ DANGER: Carbon monoxide hazard

Exhaust fumes from the engine contain carbon monoxide (CO), a poisonous gas you cannot see, smell, or taste. The CO generated by the engine can rapidly accumulate, even in areas that appear to be well ventilated, resulting in dangerous and fatal concentrations within minutes. NEVER run pressure washer inside any enclosed or semi-enclosed spaces, including homes, garages, basements, sheds, boxes, pick-up truck beds, RVs, or boats. These spaces can trap poisonous gases, EVEN if you run a fan or open windows. If you start to feel sick, dizzy, or weak while using the pressure washer, shut off the engine and get to fresh air RIGHT AWAY. See a doctor. You may have carbon monoxide poisoning.

Install Spark Arrestor (if Required)

Equip engine with spark arrestor if machine will be used near any ignitable forest, brush, or grassy land. (See engine Owner's Manual provided to determine if the engine is already equipped.) Make sure you comply with applicable local, state, and federal codes.

Operation

Follow Safety Rules for Operation

After you have checked and fueled the equipment and positioned it in a suitable worksite, it is time to start your pressure washer. The following are the procedures necessary for safe, successful operation of your pressure washer.

> **⚠ WARNING**
> Failure to follow safety rules may result in serious injury or death to the operator or bystanders.

Instruct operators. Owner must instruct all operators in safe set-up and operation. Do not allow anyone to operate the pressure washer who has not read the Owner's Manual and been instructed on its safe use.
Safety equipment/controls. Always operate with all safety covers, guards, and barriers in place and in good working order, and all controls properly adjusted for safe operation.
Moving parts. Keep hands, feet, hair and apparel away from moving parts. Air vents may cover moving parts and should be avoided as well. Never remove any guards while the unit is operating.

Ear Protection. Hearing can be damaged from prolonged, close-range exposure to the type of noise produced by this pressure washer. The use of ear plugs or other hearing protection device is recommended for persons working within 15-20 feet of the running pressure washer for an extended period of time.
Eye Protection. Wear ANSI/OSHA required "Z87.1" safety glasses when operating or servicing the pressure washer. Pressurized spray from this unit can cause severe injury to the eyes. Small objects can become airborne as the spray contacts them.

Before starting the pressure washer, review the following general safety rules for operation:

Conditions for Use

Know how to stop. Be thoroughly familiar with proper use of the equipment and all controls and connections. Know how to stop the pressure washer and depressurize system quickly if needed (see "Step 4. Stopping").
Instruct all operators. The pressure washer's owner must instruct all operators and potential renters in safe set-up and operation. Do not allow anyone to operate the pressure washer who has not read the Owner's Manual and been instructed on its safe use.
Adult control only. Only trained adults should set up and operate the pressure washer. Do not let children operate. Pressure washers can generate forces greater than children can control and require judgment beyond what can be expected of children.
Under the influence. Never operate, or let anyone else operate, the pressure washer while fatigued or under the influence of alcohol, drugs, or medication.
Safety equipment / controls in place. Do not operate the pressure washer unless all safety covers, guards, and barriers are in place and in good working order, and all controls are properly adjusted for safe operation.
Damaged. Do not operate the pressure washer with damaged, missing, or broken parts. Never attempt to repair a high pressure hose or component. Always replace it with a part that is rated at or above the pressure rating of the machine.
Modifications. Do not modify the pressure washer in any way or deactivate any safety device. Do not change or add to fuel tank, fuel lines, or exhaust system. Modifications can result in hazards related to carbon monoxide poisoning, fuel leaks, fire, explosion or other serious safety hazards, and will also void the warranty.

During Use

Stay alert. Watch what you are doing at all times.
Clear work area. Clear the work area of all bystanders.
Keep children and pets away.
Keep spray away from electrical wiring. Spray contact with electrical wiring will likely result in severe electrical shock or electrocution.
Hot exhaust/parts. Stay clear of engine exhaust. Never touch hot engine muffler, or other hot surfaces. All are very hot and will burn you.
Do not direct spray at this machine. Do not attempt to clean this machine with its own spray. Engine damage will result. Cleaning should be done with a damp sponge with the engine OFF.
Let engine cool at least two minutes before refueling.
Avoid inhalation of exhaust. This product emits CO and chemicals known to the State of California to cause cancer, birth defects or other reproductive harm.
Never pull by hose. Do not move this machine by pulling on the hose. Hose or connections could fail and result in catastrophic high pressure release of fluid as well as hose whipping.
Avoid sharp objects. Keep hose away from sharp objects. Bursting hoses may cause injury.

No load bearing. Do not use the pump to support other items of equipment that impose unacceptable loads on the pump. Do not attempt to use this machine as a prop.
Lock trigger safety latch when not spraying. Spray gun is equipped with a built-in trigger safety latch to guard against accidental trigger release. Rotate safety latch to the locked position when not spraying.
Leaving unattended. Always turn off the pressure washer and relieve system pressure before leaving the sprayer unattended.

Prompt Emergency Response

Seek medical aid for suspected injection injury. If injured by high-pressure fluid, no matter how small the wound is, see a doctor at once. A typical injection injury may be a small puncture wound that does not look serious. However, severe infection or reaction can result if proper medical treatment is not administered immediately by a doctor who is familiar with injection injuries.
Seek medical aid for suspected carbon monoxide poisoning. The running engine gives off carbon monoxide, a poisonous gas that can kill you. If you start to feel sick, dizzy, or weak while using the pressure washer, shut off the engine and get to fresh air RIGHT AWAY. See a doctor. You may have carbon monoxide poisoning.

Put on Personal Protective Gear

⚠ WARNING: Personal Protective Gear

Use personal protective gear to prevent:
- Eye and skin injection injury from high pressure spray
- Eye injury from flying debris

1. Wear waterproof gloves, safety glasses with side and top protection, face protection, and protective clothing when operating the machine. If spraying pressure washer specific chemicals, wear a respirator mask to avoid inhalation of vapors if directed on the chemical label.
2. Wear non-slip, protective footwear. Use of pressure washer can create puddles and slippery surfaces. Wear footwear capable of maintaining a good grip on wet surfaces.

Preparing for Operation

Make sure that any regular maintenance has been performed as prescribed in *"Maintenance & Repair"* section.

Check/Add Oil to Pump

⚠ CAUTION

Never run the pump without sufficient lubrication!

1. Check oil level. Verify that oil level is half way up the sight glass (or at the indicator line on the dipstick).
2. If oil level is low, fill using the following guidelines:

Pump	Oil Type
NorthStar	• Universal Tractor Transmission Oil (part # COCP2101) • Mobil 1 Synthetic oil 15W-50

3. Replace fill cap.

Check/Add Engine Oil

Use the recommended oil type for your engine and expected ambient conditions. (See engine Owner's Manual for oil type and capacity, and more detailed oil check/fill instructions.)
Use included funnel to fill engine oil.

⚠ WARNING: Burn Hazard

Never open oil port while engine is running. Hot oil can spray over face and body.

Notes:

- Low oil shutdown feature on 1572081 & 1572082 prevents the engine from starting without sufficient oil.
- Engine is shipped without oil. You must add oil before first use.

Add Fuel

⚠ WARNING: Fuel Fire/Explosion Hazard

Gasoline is highly flammable and explosive. Heat, sparks, and flames can ignite fuel vapors, which can become widespread during fueling. A flash fire and/or explosion could result and cause serious injury or death. Always use extreme care when handling fuels. Carefully follow all instructions to avoid the following conditions which could result in fuel ignition:
- gas vapor collection inside enclosures
- static electric sparks
- sparks from electric wiring, batteries, or running engines
- sources of heat (such as a hot engine exhaust)
- open flames, including pilot lights

Always follow these general safety rules when fueling:

1) Turn pressure washer off and allow to cool for at least two minutes before removing any fuel cap.
   Note: A running or still-hot engine is hot enough to ignite fuel.
2) Fill fuel tank OUTDOORS – never indoors. Fuel vapors can ignite if they collect inside and enclosure and explosion can result.
3) Stay away from all sources of heat, sparks, and flames. Do not smoke.
4) Never pump fuel directly into the gas tank at a gas station – it could cause a static electric spark. Follow these steps to avoid static electric sparking during fueling:
   - Use an approved portable container to transfer fuel to the pressure washer's tank. (A portable container made of metal or conductive plastic is preferred because it dissipates charge to ground more readily.)
   - Always place container on the ground to be filled. Never fill the portable gas container while it is sitting inside a vehicle, trailer, trunk, or pick-up truck bed.
   - Dissipate static charge from your body before beginning the fueling process by touching a grounded metal object at a safe distance from fuel sources.
   - Keep nozzle in contact with container while filling. Do not use a nozzle lock-open device.
5) Clean up fuel spills/splashes immediately.
   - If possible, move the pressure washer away from spilled fuel on the ground.
   - Wipe up spilled fuel and wait 5 minutes for excess fuel to evaporate before starting engine.
   - Fuel soaked rags are flammable and should be disposed of properly.
   - If fuel is spilled on your skin or clothes, change clothes and wash skin immediately.

Fill Engine Fuel Tank

Check the gasoline tank level. If needed, fill tank with fresh unleaded gasoline from a portable container:

1) Remove engine gas cap.
2) Add gasoline through the fill opening:
   - Use only a UL-listed portable gasoline container to transfer the gasoline to engine's tank.
   - Do NOT overfill the gasoline tank. Allow at least 1/2" of empty space below the fill neck to allow for fuel expansion.
3) Replace gas cap securely before starting engine.
4) Store extra gasoline in a cool, dry place in an UL-approved, tightly sealed container.

Inspect Fuel System/Check for Leaks

Inspect the engine fuel system and check for leaks before starting pressure washer and before each use.

Do not start pressure washer until all needed repairs have been completed.

⚠ WARNING: Fuel Leak Hazard

Gasoline fuel is highly explosive and fuel leaks can result in fire or explosions. You can be burned and seriously injured if the fuel system is not properly hooked up or there is a fuel leak when you start the engine.

Inspect the entire fuel system. Look for:

- signs of leaks or deterioration
- chafed or spongy fuel hose
- loose connections
- loose or missing fuel hose clamps
- damaged fuel tank
- defective gasoline shut-off valve

Inspect Spray System

Always inspect spray system for damage and leaks before each use. Do not start pressure washer until all needed repairs have been completed.

⚠ WARNING: High Pressure Fluid Injection Hazard

High-pressure fluid discharge from leaks (even pin-sized) or ruptured components can pierce skin and inject fluid into the body. Injection injury can result in blood poisoning and/or severe tissue damage leading to infection, gangrene, and possibly amputation.

- Never use a finger or skin to check for leaks.
- Never operate machine with damaged or missing hoses/parts.
- Never attempt to repair a high-pressure hose or component – Always replace it with a part that is rated at or above the pressure rating of this machine.

Perform Scheduled Maintenance, As needed

Make sure that any other regular maintenance has been performed as prescribed in this manual in the "Maintenance & Repair" section.

1. Refer to the engine owner's manual for engine maintenance instructions.

2. Make sure battery is charged. Charge as needed according to your battery manufacturer's instructions.

Connect Hoses, Water Supply, and Spray Nozzle

- For detailed instruction on positioning your pressure washer for use, turn to the "Initial Set-Up" section of this manual and reference "Step 3: Select Suitable Location".
- Where no flammable vapors, dusts, and gases are present.
- Where there is adequate, unobstructed ventilation airflow.
- With adequate clearance from combustible materials.
- On a firm, level, heat-resistant surface with good drainage and nearby access to a continuous water supply.

Attach Garden Hose to Water Inlet

1.) Make sure the water supply is clean. Debris can cause excess pump wear and reduce performance.

2.) An insufficient water supply will damage your pump. Make sure the water supply is steady and is 20% over the rated flow of your pump. Use a stopwatch to time how long it takes to fill a 5-gallon bucket with your garden hose.

Model	Time to fill 5 gallon bucket
1572081	56 seconds
1572082	42 seconds
1572091	50 seconds
1572092	36 seconds

3.) The water supply garden hose must have an inside diameter of at least 5/8". If the hose is more than 100 ft. long, the diameter must be at least 3/4".

4.) The water source pressure must not exceed 115 psi (8 bar).

5.) Always use a flexible rubber hose for your water supply. Do not use rigid piping.

1572081 & 1572082 1572091 & 1572092

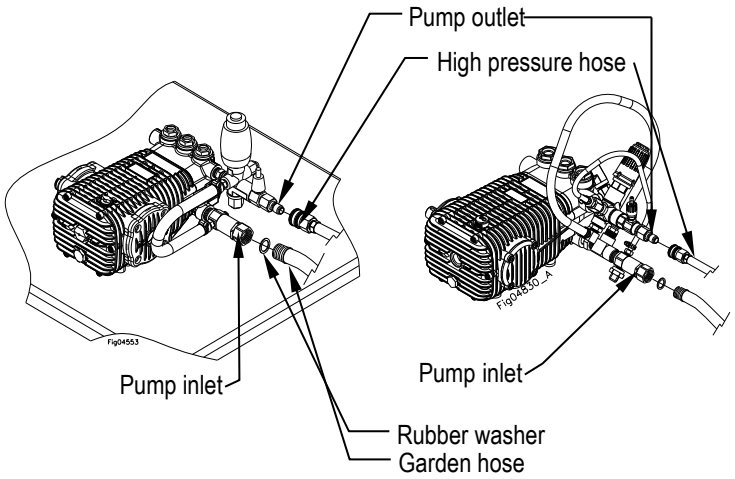

Pressure Washing with a Low Flow Water Supply

If the water supply available does not meet the above time-to-fill requirements, the nozzles will have to be downsized to #3.0 nozzles. Failure to downsize the nozzles will result in cavitation and damage to the pump. To order NorthStar #3.0 nozzles, part number 38531, call NorthStar Product Support at 1-800-270-0810.

Attaching Water Feed Tank (if desired)

Water may be supplied to the pressure washer either via an external tank or via a standard tap water supply.

CAUTION: Inadequate Water Supply

Inadequate plumbing between a feed tank and the pressure washer can cause damage to the pump from cavitation.

To avoid cavitation:

- Use ¾" hose and fittings or larger. Hose should be shorter than 6 feet.
- Place feed tank so that bottom of tank is level or higher than the bottom of the pump inlet
- Place feed tank as close as possible to the pressure washer so the connection hose is as short as possible.

- Make sure the connection hose do not kink.
- Never allow tank to run dry.

To connect an external feed tank, follow the steps below:

1. Customer will supply the following:
   a. 200 gallon tank or larger water feed tank
   b. ¾" connection hose no longer than 6 ft.
   c. ¾" fittings. Do not use 90° elbow fittings.
2. Make sure that the bottom of the water feed tank is level or higher than the pump inlet.
3. Connect one end of the ¾" hose to the water tank.
4. Connect the other end of the ¾" hose to the pump. Make sure the connection hose will not kink.
5. Reroute 1/4" easy start hose if equipped so it discharges back to the feed tank. This will aid in pump priming upon initial start-up. Remove ¼" hose barb from inlet and replace with 1/4" NPT plug (to be supplied by customer).

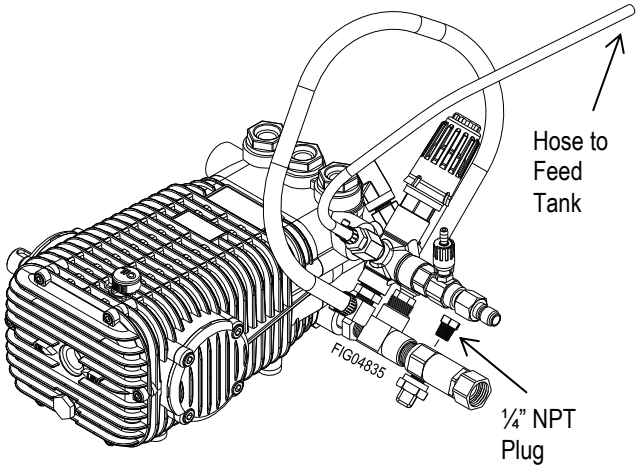

6. Fill the tank to desired level.

CAUTION: Adding Chemicals to Feed Tank

Certain chemicals, such as bleach or those containing muriatic acid, will cause pump damage if introduced upstream through the pump's water inlet and will void warranty.

Attach High Pressure Hose to Water Outlet

⚠ WARNING: High Pressure

NEVER operate this pump with components (such as hose, connections, and spray gun) rated for lower pressure and/or temperature limits than the machine's maximum rated pressure and temperature, or component could rupture and cause serious personal injury from escaping high pressure fluids.

1. See "Component Identification" section of this manual for location of the pressure washer's water outlet.
2. Your pressure washer hose is equipped with quick couplers. Simply pull the collar back and push the coupler onto the water outlet nipple. The collar should slide over the ball bearings.

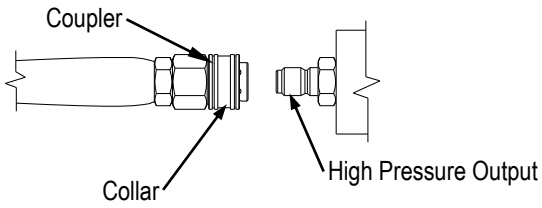

3. Release the collar, making sure it springs back and re-seats to its original (non-retracted) position. *Check the connection by pulling on the hose to ensure a positive connection.*

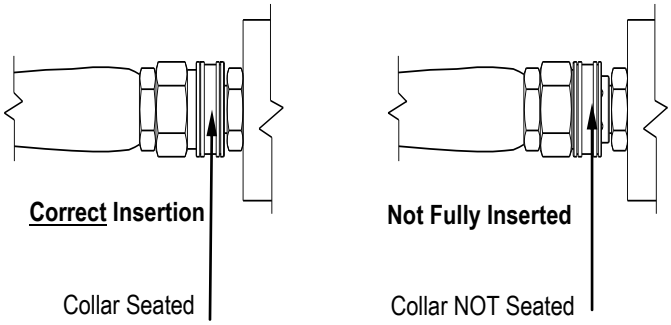

Select nozzle for spray gun

Your pressure washer is equipped with four high-pressure nozzles and one low-pressure nozzle. Generally, the wider the spray angle of the nozzle, the lower the spray impact produced. Select the appropriate nozzle for the job based on the following table:

Color of Nozzle:	Spray Angle	Used For:
Red	0	Highest Impact
Yellow	15	Tough Stains/Stripping
Green	25	General
White	40	Light Cleaning
Black-Low pressure	65	Chemicals

NOTE: You must use the low pressure black nozzle for spraying chemicals.

Spray Gun Safety Lock

When not spraying, use the spray gun safety lock to prevent accidental high pressure discharge.

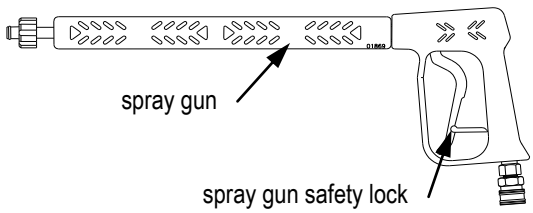

Attaching the Lance

Note: The o-rings make the seal so there is no need to tighten with a wrench

Models: 1572081 & 1572082

Hand tighten spin-on coupler

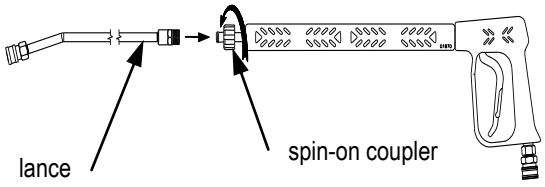

Models: 1572091 & 1572092

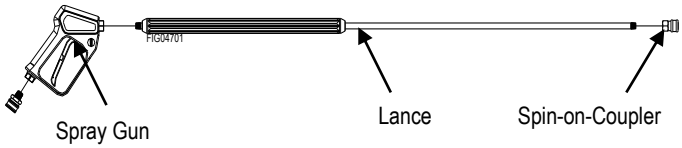

Attach Nozzle to Spray Gun

> **⚠ WARNING: Depressurize First**
>
> Any time you remove/install/change a nozzle, you must depressurize hose line by squeezing the spray gun trigger while the engine is off. Even if the engine has been off for a long period of time, the hose may remain dangerously pressurized.

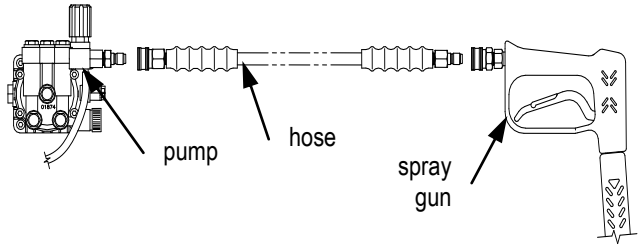

1. Make sure the engine is off and the hose line depressurized.
2. To install the nozzle, pull the collar back and twist the nozzle firmly into the coupler on the end of the wand.

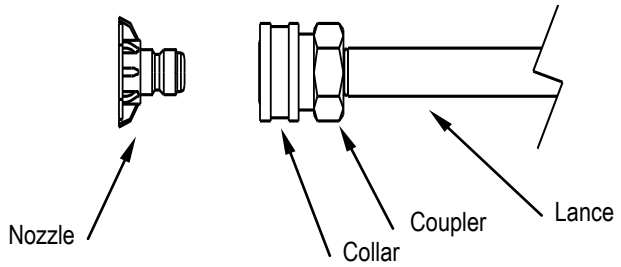

3. Release the collar, making sure it springs back and re-seats to its original (non-retracted) position. *Check the connection by pulling on the nozzle to ensure a tight connection -- if correctly inserted, nozzle will rotate but not pull out.*

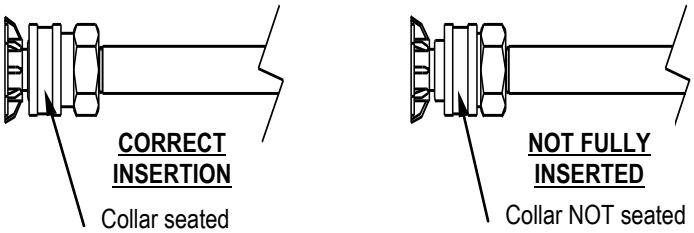

Attach Quick Connect Couplers

-To install the hose onto the pump, pull back the collar and push the hose into the coupler on the pump.
-To install the hose onto the spray gun, pull back the collar on the spray gun and push the hose into the coupler on the spray gun.

Prime the Water Supply

Turn on water supply and squeeze the trigger.

> **CAUTION: Water Pressure**
>
> Never run the pump without the water supply connected and turned on. Operating the pressure washer without a sufficient incoming flow of water will damage the pump.

- Turn on the water supply. Make sure the water supply is steady and flowing at a rate 20% over the rated flow of your pump. (See Step 1 above, "Connect Hoses, Water Supply, and Nozzle").
- Purge air from the water supply hose by squeezing the trigger until a steady stream of water flows out of the nozzle at low pressure. (Air in the hoses can cause damage to the pump, so always make sure all the air is out of the hoses before starting the pressure washer engine.)
- Make sure the water supply hose is not kinked. A kinked hose will provide insufficient water supply to the pump and reduce its life. Make sure the hose remains unkinked after moving the pressure washer.

Set Up for Chemical Spray (if desired)

Using the proper cleaning chemical for the application can speed up cleaning jobs tremendously.

Your pressure washer is equipped with a chemical injection point on the downstream side of the pump for introducing cleaning chemicals into the water stream. A braided chemical hose is provided to connect at this point. Suction pressure at this connection automatically draws the chemical solution in through the hose, mixing in 1 part chemical to 15 parts water. Adequate suction pressure is created only when the low pressure (black) spray nozzle is used.

The introduction of cleaning chemicals via the chemical injection point affords the following advantages:

- It protects the pump from damage because no chemical passes through the pump.
- It mixes the cleaning chemical into a low pressure spray. Cleaning chemicals applied under low pressure adhere better to the surface being cleaned, allowing the formula time to react and remove dirt more effectively.

Note: An external *upstream chemical injector* is not recommended for use with this pressure washer, and if used would obviously alter the 15-to-1 dilution ratio and may cause pump damage.

CAUTION: Chemicals Containing Muriatic Acid

Certain chemicals, such as bleach or those containing muriatic acid, will cause pump damage if introduced upstream through the pump's water inlet and will void warranty.

⚠ WARNING: Chemical Spraying

- Never spray acids, corrosives, or abrasive or flammable liquids. Breathing hazards, surface burns/corrosion, or fire/explosion could result.
- Follow the chemical manufacturer's label instructions for proper use and handling of the chemical. Understand all safety hazards and first aid for all chemicals being used. Always wear protective gloves when handling and cleaning with chemicals, and wear other protective gear as directed by chemical manufacturer. Always dispose of hazardous fluids per local, state, and national guidelines.

Acquire Cleaning Chemical

Use only approved pressure washer chemicals or chemicals specifically formulated for use with pressure washers.

CAUTION: Non-approved Chemicals

Non-approved chemicals can damage pressure washer components (seals, wand, hoses, pump, etc.) and be harmful to the environment and will void warranty.

Prepare for Chemical Spray (If Planning on Using)

Prepare the pressure washer for chemical spraying using the following steps:

1. Prepare (dilute) chemical cleaning solution as required for the job.

   (Note: the chemical solution will be automatically mixed with the water at a ratio of 15 parts water to 1 part chemical solution.)
2. Press the braided chemical hose over the chemical injector on the pump.
3. Submerge the suction strainer connected to the braided chemical hose into a bucket containing the chemical solution.

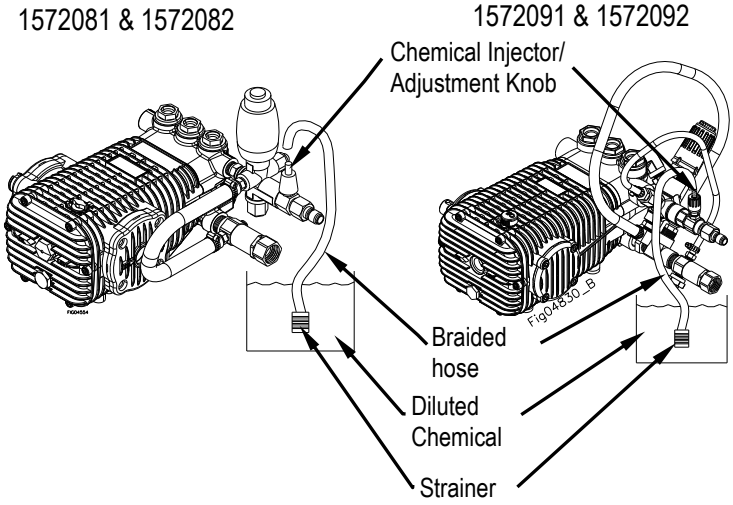

Note: *Adding accessories (IE: telescoping wands, extra length of High pressure hose, Non factory triggers) will affect chemical injector performance or cause it not to operate at all.*

Start-Up Procedures

Start the Engine to Power the Pump.

1. Make sure water supply is connected and primed.

   CAUTION: Warranty Void

   Running the pump dry will cause damage and void the warranty.
2. To prevent accidental spraying, engage the safety latch on spray gun trigger by rotating it to the locked position.
3. Follow the instructions in the Engine Manual for starting the engine.

   - If the engine doesn't start on the first try, pressure may build up in the pump. Relieve pressure by squeezing the spray gun trigger

before attempting to start engine again. This will make starting easier.

⚠ DANGER: Engine Exhaust

Do not inhale engine exhaust. It contains dangerous carbon monoxide that can kill you.

Apply Cleaning Chemical (If Desired)

1. Make sure the chemical injector is properly set up according to the instructions in Step 2, "Set Up for Chemical Spraying".
2. Make sure the low pressure BLACK nozzle is attached before beginning to spray chemicals -- *Only the low pressure black nozzle will allow chemicals to be drawn through the chemical injector into the water stream.*
3. Apply chemicals by squeezing the spray gun trigger. The chemical injector will draw the chemical into the water stream.
4. The chemical concentration of the spray can be changed by turning the chemical adjustment knob located on the chemical injector.
5. Apply chemicals evenly to the cleaning surface. Never use more chemical than is necessary to clean the surface.
6. Allow the chemicals time to react with the dirt before rinsing.
7. Prepare to rinse by changing to a high-pressure nozzle. Changing the nozzle from the low-pressure black nozzle to a high-pressure nozzle will stop the flow of chemicals into the water stream.

   Refer to instructions for selecting and changing the nozzle in Step 1, "Connect Hoses, Water Supply, and Nozzle".
8. Rinse with high-pressure spray as instructed below.

Begin High Pressure Spray

⚠ WARNING: High Pressure Spraying Safety

- **Keep spray away from people.** Never direct discharge stream at or near any person. Do not allow any part of the body to come in contact with the fluid stream. High-pressure spray can cause serious skin, eye, or falling injuries. Injection injury will occur if high-pressure spray pierces the skin, injecting liquid under the skin. Injection injury can result in blood poisoning and/or severe tissue damage leading to infection, gangrene and possibly amputation. Seek medical attention.
- **Do not secure trigger open.** To reduce risk of injury, do not attempt to secure the spray gun open by blocking or tying the spray gun in the open position.
- **Prevent slips / loss of balance**. High-pressure spray could cause you to lose balance from kickback forces, and wet surfaces can be slippery.
  - Keep good footing and balance at all times. Do not overreach.
  - Do not stand on unstable support when spraying.
  - If spraying from an elevated surface, use fall protection because spray gun kickback can propel you off the elevated surface. When spraying from a ladder or scaffolding, ensure it is firmly anchored from sway or tip-over.
  - Be aware of puddles and slippery surfaces. Ensure there is adequate drainage to prevent pooling of water.
- **Prevent surface damage & flying debris** – Surfaces being sprayed must be strong enough to withstand high-pressure spray or damage may result. In addition, high-pressure spray will dislodge unsecured objects as well as surface chips and debris, resulting in hazardous flying objects that can cause personal injury or property damage. Do not spray brittle surfaces or breakable, fragile, or unsecured objects such as:
  - stucco or laminar flagstone
  - some painted surfaces
  - windows or glass doors (because they may break)
  - light fixtures, flowerbeds, mailboxes
  - unsecured, lightweight objects

Procedure:

1. Put on one of the high-pressure spray nozzles (always relieve system pressure first and follow instructions for attaching a nozzle).
2. Clear the cleaning area of all persons. Keep children and pets away.
3. Hold the spray gun firmly with two hands and a sturdy stance -- Gun kicks back when triggered.
4. Wash from the bottom to the top, using side-to-side motions. This washes away heavy dirt and allows the detergent to soak as you work toward the top.
5. Use the width of the spray pattern to wash a wide path. Overlap spray paths for complete coverage.
6. The nozzle should be 12" to 24" from the work, closer for tough areas.
7. Small parts should be washed in a basket so the pressure does not push them away. Larger, lightweight parts should be clamped down.
8. The pressure washer is set and locked to the maximum rated pressure when it leaves the factory.
9. To reduce the pressure, turn the unloader knob counterclockwise.

⚠ WARNING: Warranty Void

Do not attempt to alter the unloader valve's maximum pressure. Excess pressure could cause serious injury from escaping high-pressure fluids and/or pump damage. Any alteration other than turning the adjustment knob will void your warranty.

1572081 & 1572082

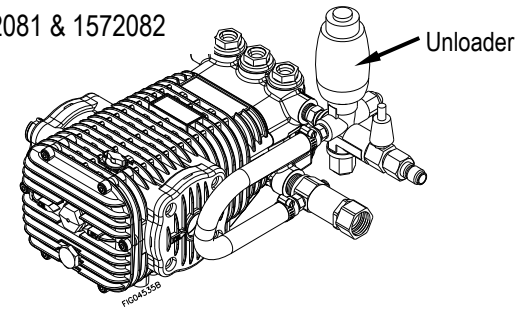

1572091 & 1572092

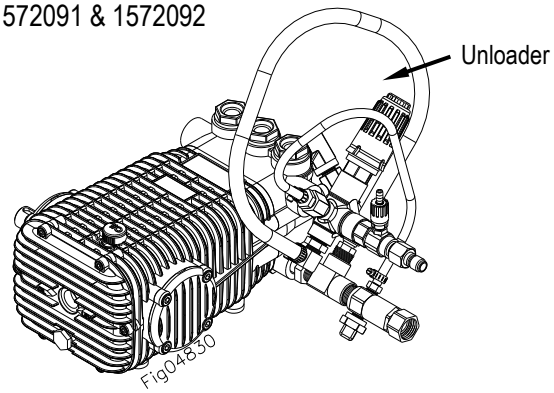

10. If temporarily interrupting spraying, rotate trigger safety latch downward to the locked position to guard against accidental trigger release.

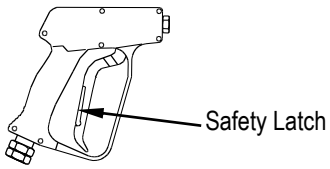

11. Always turn off the engine and activate spray gun trigger to relieve system pressure when:
    - the sprayer is unattended, or
    - disconnecting hoses, installing/cleaning nozzles, or servicing the pump.

⚠ WARNING: Injury

Always turn off the engine and relieve system pressure when finished spraying or when leaving sprayer unattended. Serious injury could result from unintentional release of high-pressure spray.

Shutdown

Stop the engine using the following steps:

⚠ WARNING: Injury

Never disconnect the high-pressure hose from the pump or spray gun while the system is pressurized. Relieve pressure by squeezing the spray gun trigger after the engine is turned OFF.

1. Turn engine OFF.
2. Turn water supply OFF.
3. *Actuate spray gun trigger to relieve system pressure*.
4. Remove garden hose.
5. Remove pressure hose.
6. Remove nozzle from spray gun.
7. Turn gasoline line valve to the OFF position.
8. If chemicals were used, remove chemical injector tube from the pump.

Storage

When you are finished using the pressure washer, you must prepare the sprayer for storage and store it in a proper location.

Between-Use Storage

Perform periodic maintenance as directed in this manual to keep the pressure washer in safe working condition.

Choose a storage location that is:

- Clean and dry.
- Away from sources of heat, open flames, sparks, or pilot lights, even if the pressure washer's engine fuel tank is empty. Residual fuel fumes from tank can ignite.

Away from extreme high or low temperatures. Do not store the pressure washer in freezing conditions unless it is prepared as directed below for those conditions.

Note:

- **If you will be storing the sprayer in freezing conditions**, follow the instructions for preparing the sprayer for storage in freezing conditions.
- **If you will not be using the sprayer again for 30 days or more**, follow the instructions for preparing the engine for long-term storage.

⚠ WARNING: Flammable Materials

- **Fuel and its vapors can ignite and cause a fire.** Select a well-ventilated storage area away from sources of heat, flame, or sparks.
- **A hot engine can ignite flammable materials.** Always let engine cool at least five minutes before storing.

Prepare Pressure Washer for Freezing Conditions

If you will be storing the pressure washer in freezing temperatures, you must properly prepare the pressure washer to prevent water from freezing in the system.

⚠ WARNING: Freezing Conditions

Do not allow water to freeze in the pressure washer, high pressure hose, or spray gun. Freezing water can cause damage to the equipment and cause the spray gun to fail in the open position. A spray gun that has failed in the open position can whip around and cause personal injury when the pressure washer is started.

1. Drain the water from the high pressure hose and spray gun by depressing the trigger on the spray gun until all water drains out.
2. Disconnect the plumbing that connects to the pump outlet.
3. Obtain the materials you will need:
   - 12" piece of garden hose or equivalent
   - funnel
   - approximately 6 oz. of RV antifreeze.
4. Attach the 12" garden hose piece with the funnel to the pump inlet.
5. Pour RV antifreeze into the funnel, then pull the recoil a few times until antifreeze comes out of the pump outlet.

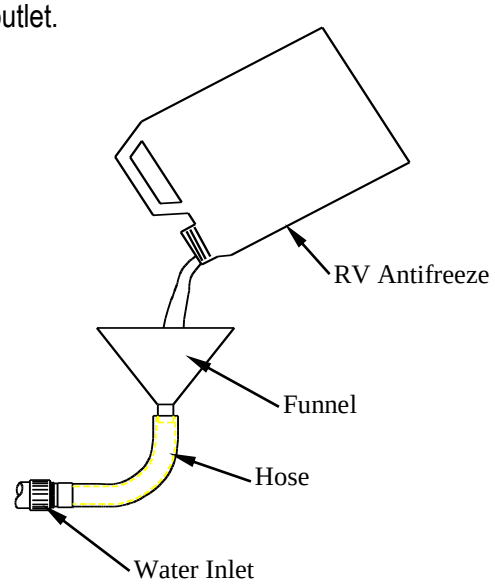

Prepare Engine for Long Term Storage

First prepare the engine for long term storage if you will not be using the pressure washer again for more than 30 days.

Fuel can become stale when stored over 30 days. Stale fuel causes acid and gum deposits to form in the fuel system which can cause malfunction of the engine.

1. Prepare fuel system for storage:
   - **Drain all gasoline** from the tank and carburetor. This is most easily accomplished by *running the pressure washer with the high pressure hose* until the engine stops from lack of fuel.

     OR

   - **Add fuel stabilizer** to the gasoline (following manufacturer's instructions)

     Fuel stabilizer steps:

     a. Ensure gas tank is full.
     b. Add fuel stabilizer to fuel tank.
     c. *Run pressure washer with high pressure hose* at least 5 minutes after adding stabilizer to allow it to enter the fuel system.
     d. Shut off engine
2. Lubricate cylinder and piston:
   a. Disconnect spark plug wire and remove spark plug
   b. Add one teaspoon oil through spark plug hole
   c. Place rag over spark plug hole and slowly pull the recoil a few times to lubricate the combustion chamber.

Replace spark plug, but do not reconnect the spark plug wire.

Prepare Pressure Washer for Storage

Prepare the pressure washer for storage.

1. Make sure the engine start switch is OFF.
2. Disconnect the engine spark plug wire if you haven't already done so.
3. Disconnect the high-pressure hose, garden hose, and spray gun.

Move Pressure Washer to Storage Location

Let engine cool for 5 minutes before moving the pressure washer to its storage location.

Maintenance & Repair

⚠ WARNING: Maintenance Hazards

ALWAYS shut off water supply, bleed water pressure, turn off engine and disconnect the spark plug wire before cleaning, adjusting, or servicing the pressure washer. After servicing, make sure all guards and cover shields are replaced before using.

Maintenance Schedule Summary

Item	Frequency
Remove dust/debris accumulation	As needed
Inspect fuel system	Each use
Inspect spray system	Each use
Clean inlet filter	Each use
Check tire pressure	Each use
Perform engine maintenance	As specified in Engine Owner's manual
Change pump oil	• After first 50 hours of use • Every 3 months or 500 hours of use after that
Drive belt maintenance	• After first 24 hours of running • Routinely with each oil change after that

See detailed instructions for each maintenance item below.
(Note: For end-of-the-season storage instructions, see the "Storage" section of this manual.)

See detailed instructions for each maintenance item below.

Detailed Instructions – Maintenance & Repair

NOTICE

Dispose of used engine and pump oil in a manner that is compatible with the environment and in accordance with local, state, and federal laws and regulations.

- Take used oil in a sealed container to your local recycling center or service station for reclamation.
- Do not throw it in the trash, pour it on the ground, or pour it down a drain.

No modifications. Never modify or alter the pressure washer in any way. Modifications can create serious safety hazards and will also void the warranty.

Follow Safety Rules

Read and follow these safety rules whenever you will be servicing the pressure washer:

- **Turn off / relieve pressure first.** Always turn off pressure washer and relieve system pressure before inspection or maintenance. Remove spark plug or spark plug wire to prevent accidental starting.
- **Fuel valve off.** Turn fuel shut-off valve to OFF position before transporting or servicing the pressure washer.
- **Replace guards.** Make sure all guards and cover shields are replaced after servicing the pressure washer.
- **Major repair.** Major service, including the installation or replacement of parts, should be performed only by a qualified service technician. Obtain factory approved parts from NorthStar Product Support at 1-800-270-0810.
- **Replacement parts**. If a part needs replacement, only use factory approved repair parts. Replacement parts that do not meet specifications may result in a safety hazard or poor operation of the pressure washer and will void the warranty.

Keep Pressure Washer Clean

If dust or debris accumulates on the pressure washer, clean the pressure washer with a damp cloth or soft bristle brush. Do not allow air intakes to become blocked.

⚠ CAUTION

Do not spray pressure washer with a garden hose or pressure washer. Water may enter the pressure washer and cause damage.

Inspect Spray System

Inspect spray system for damage and leaks before each use.

Do not start pressure washer until all needed repairs have been completed.

⚠ WARNING: High Pressure Fluid Injection Hazard

High pressure fluid discharge from leaks (even pin-sized) or ruptured components can pierce skin and inject fluid into the body. Injection injury can result in blood poisoning and/or severe tissue damage leading to infection, gangrene, and possibly amputation.

- Never use a finger or skin to check for leaks.
- Never operate machine with damaged or missing hoses/parts.
- Never attempt to repair a high-pressure hose or component – Always replace it with a part that is rated at or above the pressure rating of this machine.

1) Check hoses, fittings, wand, trigger gun and connections for signs of wear, cracks, looseness, or leaks. Replace as required.

2) Check and clean the nozzle orifice.

Clean Inlet Filter

Clean the inlet filter before each use.

⚠ WARNING: Filter Disposal

When cleaning filters, check whether dangerous chemicals have been used with the filter and take any precautions that may be recommended by the manufacturer of these chemicals. Always dispose of hazardous fluids per local, state, and national guidelines.

1) Unscrew garden hose from water inlet (if connected).
2) Unscrew inlet filter.
3) Remove filter screen.
4) Run water through filter screen to clean.
5) Reassemble

1572081 & 1572082

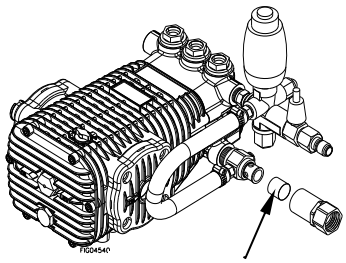

1572091 & 1572092

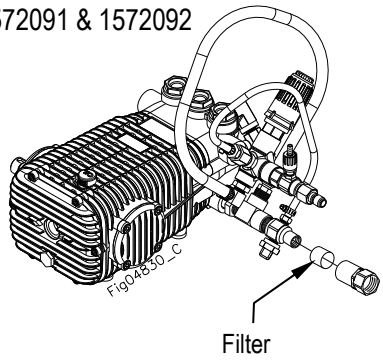

Check Tire Pressure

Check and refill tire pressure before each use.

1) Remove air cap on tire.
2) Check tire pressure.
3) If needed, fill tire to 30 psi (2.07 bar). Do not overinflate.

Replace air cap.

Change Pump Oil

Change the pump oil after the first 50 hours of use, and then after every 3 months or 500 hours of use after that.

1. Remove drain plug from pump.
2. Drain pump oil into suitable container and dispose of responsibly.
3. Reinstall oil drain plug.
4. Make sure unit is sitting level.
5. Fill pump to the middle of sight glass (or at the indicator line on the dip stick). Use 15 oz. of SAE 30 Non-Detergent Oil.

Replace oil fill cap.

1572081 &1572082

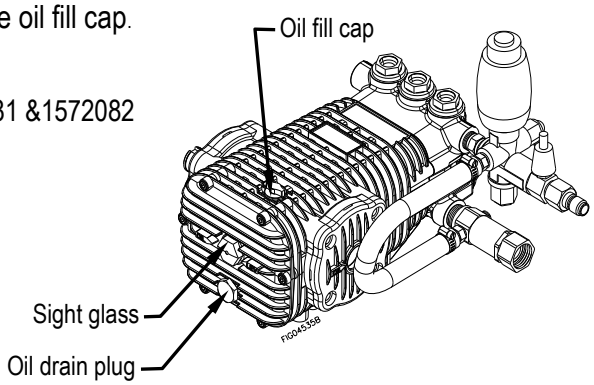

1572091 & 1572092

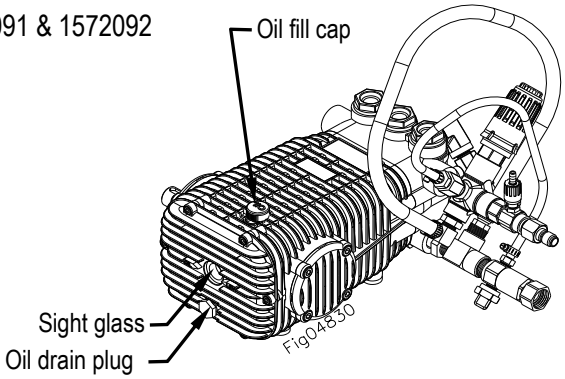

Drive Belt Maintenance

Check drive belt tension after first 24 hours of running and then routinely with each oil change. Tighten or replace belts as needed**.** Always tighten belts if slipping.

⚠ WARNING: Filter Disposal

Belt slippage can cause static electricity build-up, which may result in sparking. Fire ignition can result.

Instructions:

1) Make sure engine is off and spark plug wire is removed.
2) Remove belt guard. See "Parts Breakdown" section of this manual for location.
3) Loosen pump mounting bolts (4).
4) Inspect belts for wear/damage. Replace as needed. When replacing belts, always replace all – don't mix old and new belts.
5) Tighten tension bolt to achieve the recommended belt tension specified below. (Tightening the tension bolt pulls the pump away from the engine, tightening all two belts simultaneously.)

Tension Spec	New Belt	Used Belt
Rib/strand Deflections Distance:	0.15 in.	0.15 in.
Rib/Strand Deflection Force	6.2 lb.	6.2 lb.

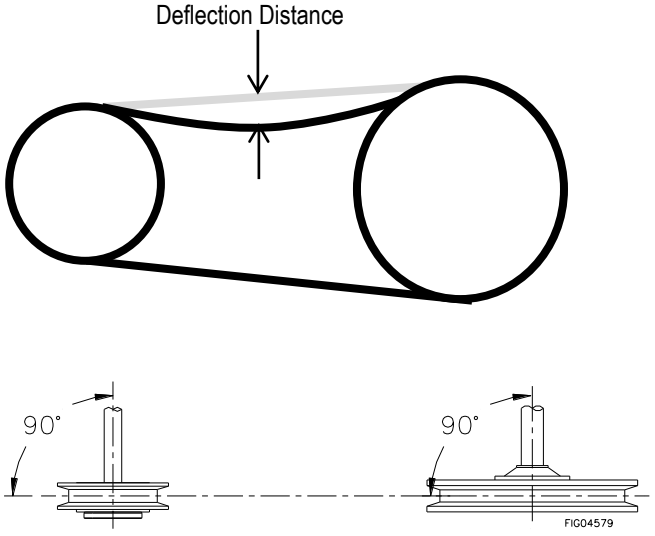

Note: Some general rules of belt tension are:

- The ideal tension is the lowest tension without belt slippage
- Over tightening decreases belt and bearing life.
- Keep belts clean and free of foreign material that may cause slippage
- Do not apply belt dressing, which can cause damage and early belt failure.

6) Ensure all belts are the same tension.
7) Re-tighten pump mounting bolts. Torque to 29.4 ft-lbs.
8) Replace belt guard.

⚠ WARNING: Entanglement

Do not operate unless belt guard is in place to prevent access to rotating parts. Clothing or hair can become rapidly entangled in unguarded rotating parts, resulting in serious injury or death.

NOTE TO COMMERCIAL USERS:

All mechanical equipment, no matter how well designed, will need maintenance and repairs. A NorthStar pressure washer is no exception. At times, a NorthStar pressure washer may become inoperable because repairs are required. NorthStar Product Support will assist in these repairs as needed, but if an inoperable pressure washer creates a major expense to your business, then we strongly recommend the following:

- Have a staff person become familiar with the mechanical operation of the pressure washer and capable of making minor repairs and performing all preventative maintenance procedures.
- Keep a stock of recommended service parts for maintenance and minor repairs.

IMPORTANT: Replacement Parts

If a part needs replacement, only use parts that meet the manufacturer's part number specifications. Replacement parts that do not meet specifications may result in a safety hazard or poor operation of the pressure washer**.**

Contact NorthStar Product Support at 1-800-270-0810 for any questions, problems, or parts orders.

Troubleshooting

This section provides a list of the more frequently encountered pressure washer malfunctions, their causes and corrective actions. Some corrective actions can be performed by the operator or maintenance personnel, and others may require assistance of a Service Center. Call NorthStar Product Support @ 1-800-270-0810 for service center locations.

ENGINE WILL NOT START	
Causes	***Solutions***
Low Oil Shutdown*	Fill engine with the adequate amount of oil
Cold Engine	Choke engine to start
No Fuel	Add gas to fuel tank – Make sure fuel shutoff valve is open
Pressure build-up from initial use	Trigger spray gun to relieve pressure
Engine not turned ON	Place ON/OFF switch in the ON position
Spark plug wire not attached	Attach spark plug wire to spark plug
LOW/SURGING PRESSURE	
Causes	***Solutions***
Insufficient water supply	Increase water flow – Check for kinked or pinched hose
Plugged inlet screen	Pull out and clean screen carefully
Need to use high pressure nozzle	Change to the green, yellow, white, or red nozzle
Plugged nozzle	Remove nozzle, check for blockage
Worn nozzle	Replace nozzle
Leak in high pressure line	Fix leaks
NO CHEMICAL INJECTION	
Causes	***Solutions***
Adjustment knob turned OFF	Rotate adjustment knob counter-clockwise
Need to use different nozzle	Change to the black nozzle
Back pressure from extra-long hose	Try shorter high pressure hose
Leak in clear chemical hose	Replace hose. Use hose clamps if necessary
Chemical strainer not submerged	Make sure strainer is completely submerged in solution

***1572081 & 1572082 only**

Parts Explosion- Model #1572081, 1572082, 1572091, 1572092-Rev J.1

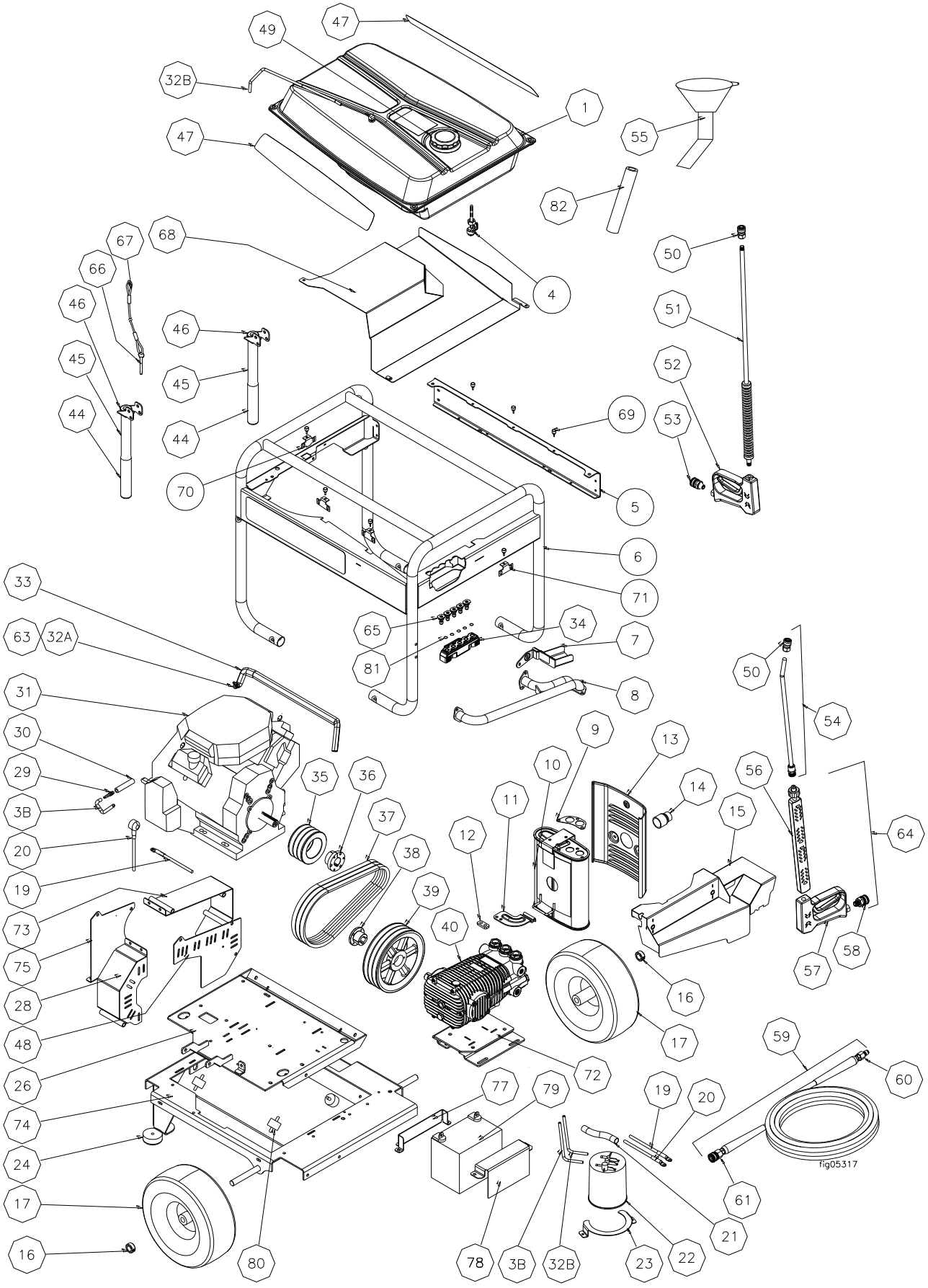

Parts Explosion- Model #1572081, 1572082, 1572091, 1572092-Rev J.1

Ref #	Part #	Description	Qty	Used on
1	791947	Fuel tank assembly w/cap	1	All
3B	785337	4.5 mm fuel line (sold by foot)	0.5 ft	1572081 1572082
			1.09 ft	1572091 1572092
4	787525	Fuel valve	1	All
5	789085	Tank bar mount	1	All
6	789221	Roll cage	1	All
7	783260	Upper mounting bracket	1	1572091 1572092
8	783250	Header assembly	1	1572091 1572092
9	783333	Muffler gasket	1	1572091 1572092
10	783410	Muffler canister	1	1572091 1572092
11	783264	Lower mounting bracket	1	1572091 1572092
12	784957	Muffler shim	1	1572091 1572092
13	780061	Heat shield	1	1572091 1572092
14	781341	Spark arrestor	1	1572091 1572092
15	787203	Heat shield	1	1572091 1572092
16	305200	Wheel retainer	2	All
17	788814	Wheel	2	All
19	777108	Battery cable, negative	1	1572081 1572082
	787446			1572091 1572092
20	32839	Battery cable, positive	1	1572081 1572082
	787445			1572091 1572092
21	31332	Protective sleeve (sold by foot)	.5 ft	1572081 1572082
			.75 ft	1572091 1572092
22	782127	Carbon canister	1	All
23	788618	Carbon canister ring	1	All
24	15431	Large shock bumpers	2	All
26	787251	Engine iso base	1	All
28	789439	Outer belt guard	1	All
29	785768	3/8" x 1/4" hose mender	1	1572091 1572092
30	785755	3/8" fuel line (sold by foot)	.25 ft	1572091 1572092
31	784970	16 HP Briggs Vanguard engine	1	1572081 1572082
	783392	Honda GX660 engine	1	1572091 1572092
32A	777345	1/4" fuel line	44"	1572081 1572082
32B	777345	1/4" fuel line (sold by foot)	2.5 ft	1572091 1572092
	777345		3 ft	All
33	31881	Heat reflective sleeve (sold by foot)	1.85 ft 1.85 ft 2.09 ft 2.09 ft	1572081 1572082 1572091 1572092
34	788696	Nozzle Holder	1	All
35	2005	Engine sheave	1	1572081 1572082
	777416		1	1572091
	789004		1	1572092
36	777790 777790	Bushing, engine sheave	1	1572081 1572082
	777417 777417		1	1572091 1572092
37	789075	Cogged belt, BX34	2 2	1572081 1572082
	35226	Cogged belt, BX36	3	1572091
	789005	Cogged belt, BX36	3	1572092
38	777419	Bushing, pump sheave	1	All
39	2006	Pump sheave	1	1572081 157208
	777418		1	1572091 1572092

Ref #	Part #	Description	Qty	Used on
40	See Pump Assemblies Parts Explosion	4.5GPM @ 4000PSI Northstar Pump	1	1572081
		6.0GPM @ 3000PSI Northstar Pump		1572082
		5.0GPM @ 5000PSI Northstar pump		1572091
		7.0GPM @ 3500PSI Northstar pump		1572092
44	30747	Handle grip	2	All
45	785459	Handle	2	All
46	2215	Handle bumpers	2	All
47	788916 788917	Tank decal	2	1572081 1572082
	788918 788919			1572091 1572092
48	789436	Belt guard side, pump	1	All
49	786712	Fuel cap with strainer	1	All
50	791308	Coupler, 1/4" F NPT	1	1572091 1572092
51	777421	48" lance w/ grip	1	1572091 1572092
52	777420	Gun handle, 5000 PSI	1	1572091 1572092
53	777422	Coupler, 3/8" MNPT, SS	1	1572091 1572092
54	791310	Lance	1	1572081 1572082
55	785290	Funnel	1	All
56	22622	Lance grip	1	1572081 1572082
57	779168	Gun	1	1572081 1572082
58	780455	3/8" male NPT coupler	1	1572081 1572082
59	38525	50 ft hose, 4000 PSI	1	1572081 1572082
	777396	50 ft hose, 5000 PSI		1572091 1572092
60	777915	Nipple, 3/8" FNPT	1	1572081 1572082
	777723	Nipple, 3/8" FNPT, SS		1572091 1572092
61	777914	Coupler, 3/8" FNPT	1	1572081 1572082
	777722	Coupler, 3/8" FNPT, SS		1572091 1572092
63	777834	1/4" hose clamp	2	All
64	779165	Gun with lance	1	1572081 1572082
65	25455 779544 25455 788767	Nozzle 5 pack #4.5 Nozzle 5 pack #7.0 Nozzle 5 pack #4.5 Nozzle 5 pack #7.5	1 1 1 1	1572081 1572082 1572091 1572092
66	786756	6" lanyard	2	All
67	38070	3/8" x 2-1/2" cotterless pin	2	All
68	789228	Tank shield	1	All
69	787259	Rubber grommet bumpers	7	All
70	791322	Tank bumper mount, short	1	All
71	787307	Tank bumper mount	3	All
72	788746	Pump mount plate	1	All
73	789440	Inner belt guard	1	All
74	788623	Base	1	All
75	789438	Belt guard side, engine	1	All
77	787453	Battery Stop	1	All
78	787620	Battery tie plate	1	All
79	349900	Battery – not provided	1	All
80	32567	Iso mount	4	All
81	788742	Replacement O-ring, Nozzle Holder	5	All
82	30160	½" Reinforced PVC Hose	6"	1572081 1572082

Pump Assemblies

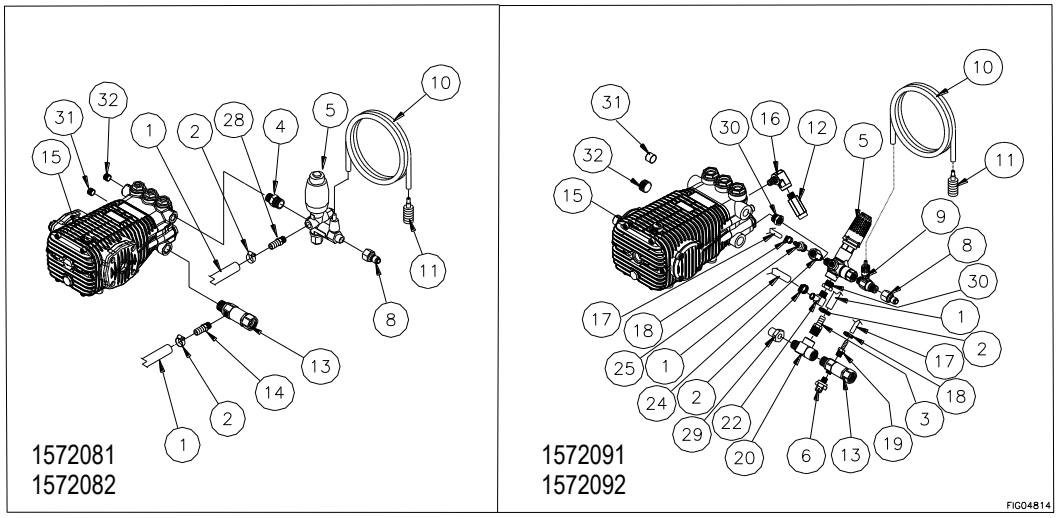

Ref#	PN	DESCRIPTION	QTY	MODEL
1	2264	1/2" hose (sold by foot)	1 ft	1572081 1572082
			2.33 ft	1572091 1572092
2	777119	1/2" hose clamp	2	All
3	2294	1/2" NPT x 1/2" hose barb	1	1572091 1572092
4	2296	3/8" x 3/8" steel nipple	1	1572081 1572082
5	788419	Unloader valve	1	1572081 1572082
	777375	Unloader valve	1	1572091 1572092
6	35918	1/4" thermal protector	1	1572091 1572092
8	777915	3/8" MNPT QC nipple	1	1572081 1572082
	777395	3/8" FNPT QC nipple, SS	1	1572091 1572092
9	789668	Injector, SS	1	1572091 1572092
10	777165	1/4" chemical hose (sold by foot)	3 ft	All
11	221222	Chemical strainer	1	All
12	777376	Safety relief valve	1	1572091 1572092
13	35169	1/2" inlet filter	1	All
14	777840	1/2" HB X 1/4" MNPT	1	1572081 1572082
15	A1572081 A1572082	Northstar NSB4540 Northstar NSSHFB6030	1	1572081 1572082
	A1572091 A1572092	Northstar NSB5050 Northstar NSSHFB7035	1	1572091 1572092

Ref#	PN	DESCRIPTION	QTY	MODEL
16	786894	¼ MPT X 3/8 FPT elbow	1	1572091 1572092
17	777345	1/4" hose (sold by foot)	1.75 ft	1572091 1572092
18	777834	1/4" hose clamp	2	1572091 1572092
19	777340	1/4" MNPT x 1/4" HB	1	1572091 1572092
20	777639	1/2" Street tee	1	1572091 1572092
22	32808	3/8"NPT x1/2"HB elbow	1	1572091 1572092
24	777423	1/4"MNPT x 3/8" FNPT	1	1572091 1572092
25	38584	Easy start valve, 3/8" NPT	1	1572091 1572092
28	777839	1/2" Nipple x 3/8" MPT	1	1572081 1572082
29	50CSC128	¾" x ½" Reducer	1	1572092
30	30048	Reducer 8MP-6FP	1	1572091
			2	1572092
31	777837 30511	3/8" Plug 1/2" Plug	1	1572081 1572082 1572091
			1	1572092
32	30511	1/2" Plug	1	1572081 1572082 1572091
	35465	3/4" Plug	1	1572092

Pump Exploded View- NSB4540 (A1572081)

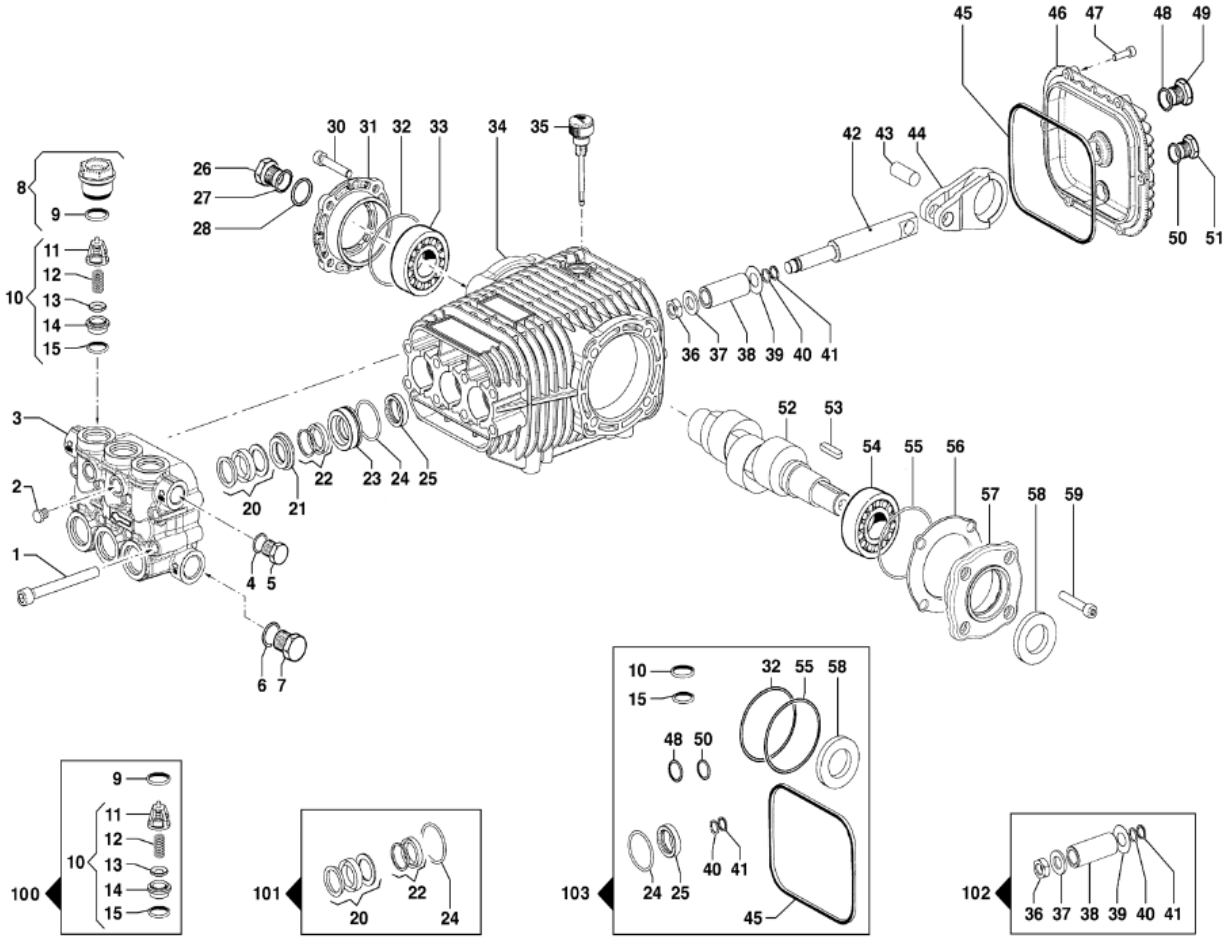

Ref #	Part #	Description	Qty
1	*Not Available*	Screw	8
2	CO3202011200	Plug, 1/4"	1
3	*Not Available*	Pump Manifold	1
4	CO2811008400	Washer (16.7 x 22 x 1.5)	1
5	CO3200000700	Plug, 1/8"	1
6	CO2811008600	Washer (21.2 x 27 x 1.5)	1
7	CO3202001500	Plug, 1/2"	1
8	CO3202031500	Valve Plug Kit & O-ring	6
9	CO1210004800	O-ring	6
10	CO1220003000	Suction/Delivery Valve	6
11	CO1205002500	Suction/Delivery Valve Cage	6
12	CO1802017700	Suction/Delivery Valve Spring	6
13	*Not Available*	Suction/Delivery Valve	6
14	CO3009008700	Suction/Delivery Valve Seat	6
15	CO1210004600	O-ring (2.62 x 17.13)	6
20	*Not Available*	Packing	3
21	CO0009035800	Packing Retainer	3
22	*Not Available*	Packing	3

Ref #	Part #	Description	Qty
37	CO2811008200	Washer (8.4 x 16 x 1.5)	3
38	CO0202002200	Ceramic Bushing	3
39	CO2812009400	Washer	3
40	CO1210003900	O-ring (1.78 x 7.66)	3
41	CO0009017000	Anti-Extr. Ring	3
42	CO2409013900	Piston Rod	3
43	*Not Available*	Gudgeon Pin	3
44	*Not Available*	Connecting Rod	3
45	CO1210036900	O-ring (3.53 x 117.1)	1
46	CO0402045900	Cover, Red	1
47	CO3609003000	Screw (M5 x 20)	6
48	CO1210004800	O-ring (2.62 x 20.24)	1
49	CO3201002700	Oil Level Plug	1
50	CO1210044100	O-ring	1
51	CO3200000700	Plug, 1/8"	1
52	*Not Available*	Solid Crankshaft (24mm)	1
53	CO1602001300	Key (8 x 7 x 30)	1
54	CO0440003100	Roller Bearing (30 x 62 x 21.25)	1

23	CO0009035900	Packing Retainer	3
24	CO1210015600	O-ring (1.78 x 31.47)	3
25	CO0019012800	Oil Seal (20 x 28 x 5)	3
26	CO3201002600	Oil Level Plug	1
27	CO1210033300	O-ring (1.78 x 23.52)	1
28	CO3019003300	Seeger / Snap Ring	1
30	*Not Available*	Screw	4
31	*Not Available*	Flange	1
32	*Not Available*	O-Ring	1
33	CO0440003100	Roller Bearing (30 x 62 x 21.25)	1
34	*Not Available*	Pump Crankcase	1
35	CO3200005100	Oil Dipstick	1
36	CO0600005400	Special Bolt	3

55	*Not Available*	O-Ring	1
56	CO0601030400	Spacer (0.05)	1
	CO0601030500	Spacer (.01)	1
	CO0601030600	Spacer (.19)	1
	CO0601030700	Spacer (.25)	1
57	*Not Available*	Flange	1
58	*Not Available*	Oil Seal	1
59	*Not Available*	Screw	4
100	CO5025001100	Complete Valve Kit	1
101	CO5019067300	Water Seal Kit	1
102	CO2409014600	Piston Kit	1
103	CO5019067500	Oil Seal Kit	1

Pump Exploded View- NSSHFB6030 (A1572082)

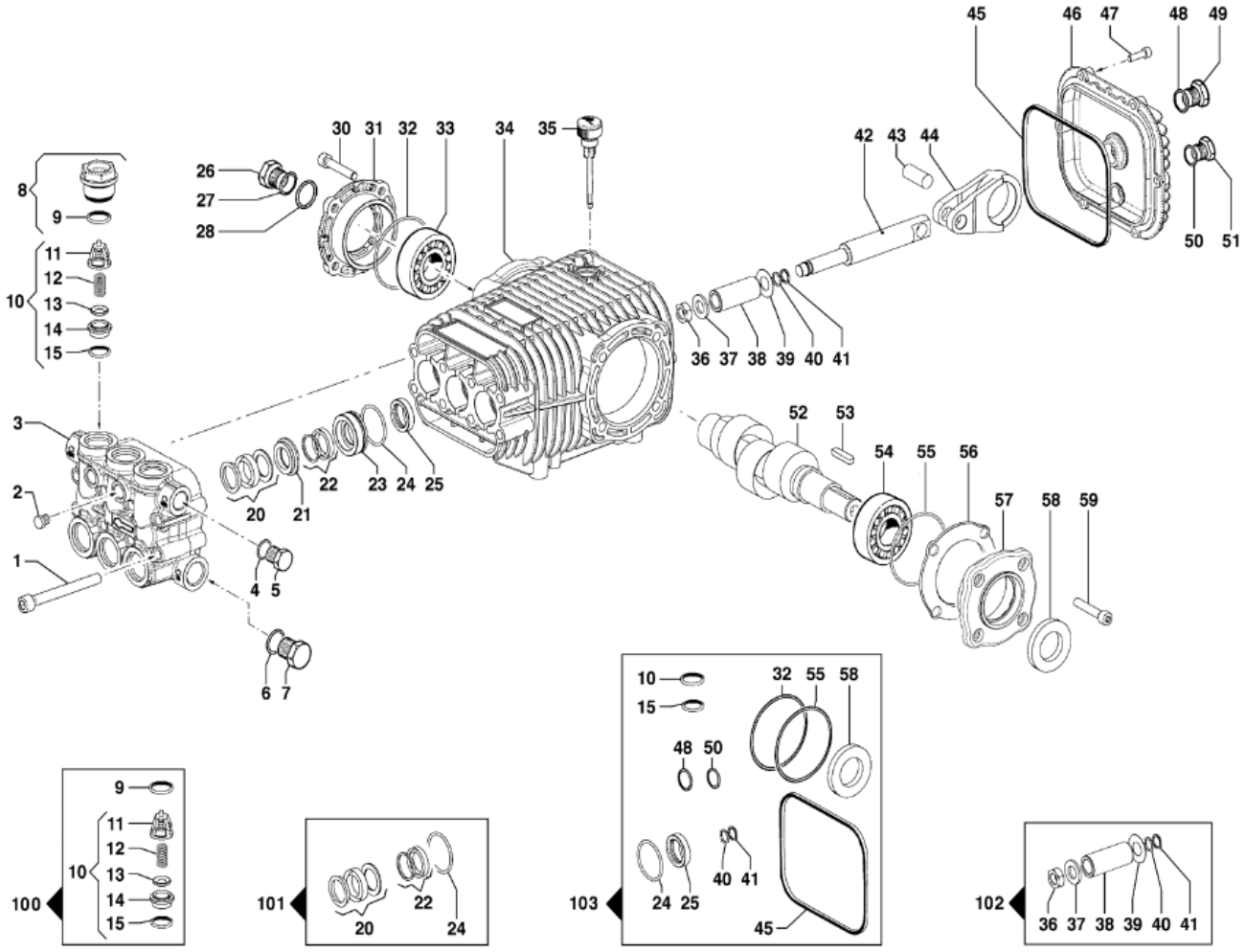

Ref #	Part #	Description	Qty
1	*Not Available*	Screw	8
2	CO3202011200	Plug, 1/4"	1
3	*Not Available*	Pump Manifold	1
4	CO2811008400	Washer (16.7 x 22 x 1.5)	1
5	CO3200000700	Plug, 1/8"	1
6	CO2811008600	Washer (21.2 x 27 x 1.5)	1
7	CO3202001500	Plug, 1/2"	1
8	CO3202031500	Valve Plug Kit & O-ring	6
9	CO1210004800	O-ring	6
10	CO1220007200	Suction/Delivery Valve	6
11	*Not Available*	Suction/Delivery Valve Cage	6
12	CO1802017700	Suction/Delivery Valve Spring	6
13	*Not Available*	Suction/Delivery Valve	6
14	CO3009008700	Suction/Delivery Valve Seat	6
15	CO1210004600	O-ring (2.62 x 17.13)	6
20	*Not Available*	Packing	3
21	CO0009035200	Packing Retainer	3

Ref #	Part #	Description	Qty
37	CO2811008200	Washer (8.4 x 16 x 1.5)	3
38	CO0202002400	Ceramic Bushing	3
39	CO2812009400	Washer	3
40	CO1210003900	O-ring (1.78 x 7.66)	3
41	CO0009017000	Anti-Extr. Ring	3
42	CO2409013900	Piston Rod	3
43	*Not Available*	Gudgeon Pin	3
44	*Not Available*	Connecting Rod	3
45	CO1210036900	O-ring (3.53 x 117.1)	1
46	CO0402045900	Cover, Red	1
47	CO3609003000	Screw (M5 x 20)	6
48	CO1210004800	O-ring (2.62 x 20.24)	1
49	CO3201002700	Oil Level Plug	1
50	CO1210044100	O-ring	1
51	CO3200000700	Plug, 1/8"	1
52	*Not Available*	Solid Crankshaft (24mm)	1
53	CO1602001300	Key (8 x 7 x 30)	1

22	*Not Available*	Packing	3
23	CO0009035300	Packing Retainer	3
24	CO1210015600	O-ring (1.78 x 31.47)	3
25	CO0019012800	Oil Seal (20 x 28 x 5)	3
26	CO3201002600	Oil Level Plug	1
27	CO1210033300	O-ring (1.78 x 23.52)	1
28	CO3019003300	Seeger / Snap Ring	1
30	*Not Available*	Screw	4
31	*Not Available*	Flange	1
32	*Not Available*	O-Ring	1
33	CO0440003100	Roller Bearing (30 x 62 x 21.25)	1
34	*Not Available*	Pump Crankcase	1
35	CO3200005100	Oil Dipstick	1
36	CO0600005400	Special Bolt	3

54	CO0440003100	Roller Bearing (30 x 62 x 21.25)	1
55	*Not Available*	O-Ring	1
56	CO0601030400	Spacer (0.05)	1
	CO0601030500	Spacer (.01)	1
	CO0601030600	Spacer (.19)	1
	CO0601030700	Spacer (.25)	1
57	*Not Available*	Flange	1
58	*Not Available*	Oil Seal	1
59	*Not Available*	Screw	4
100	CO5025002500	Complete Valve Kit	1
101	CO5019067200	Water Seal Kit	1
102	CO2409014500	Piston Kit	1
103	CO5019067500	Oil Seal Kit	1

Pump Exploded View- NSB5050 (A1572091)

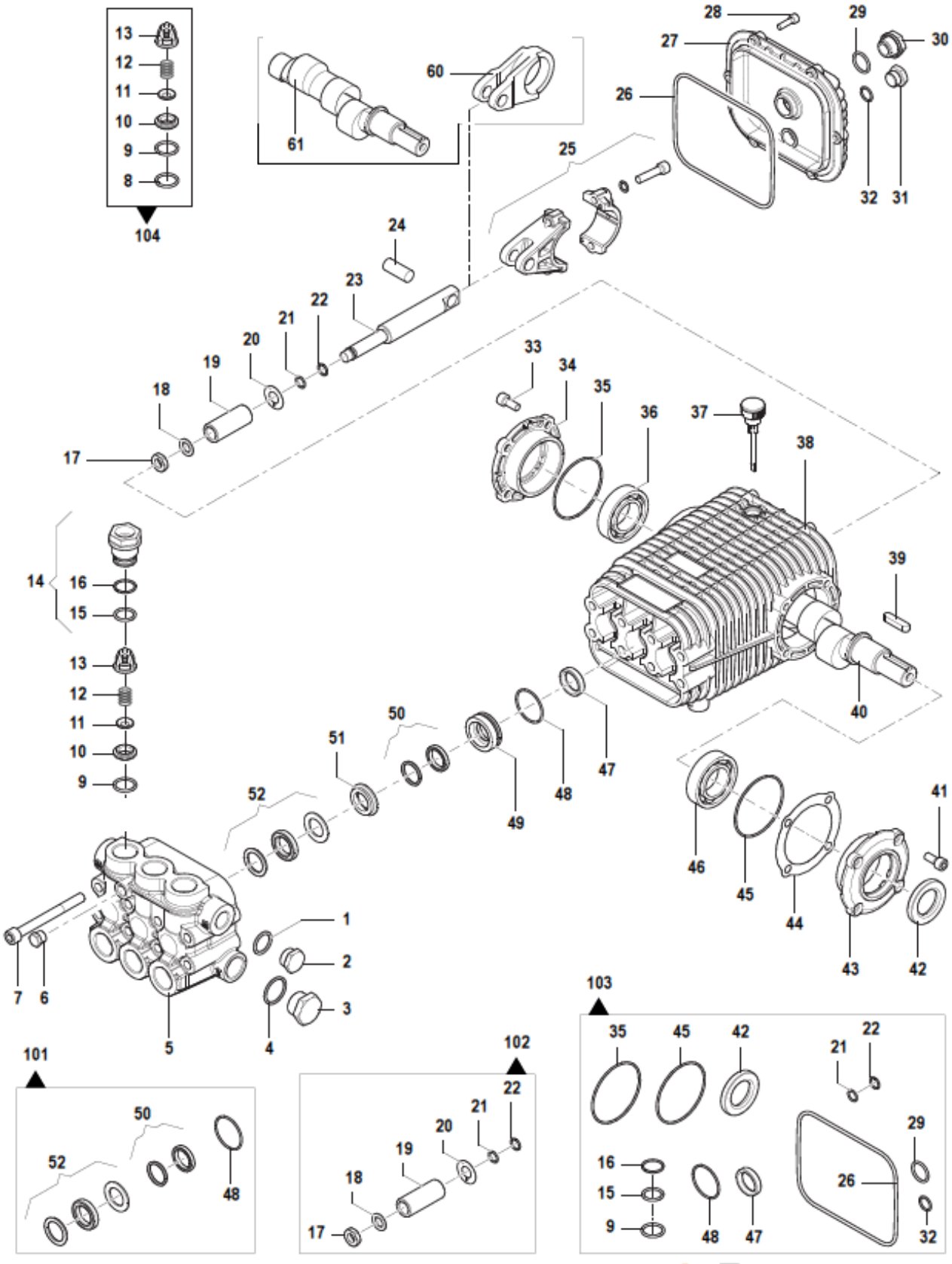

Ref #	Part #	Description	Qty
1	CO2811008400	Washer (16.7 x 22 x 1.5)	1
2	CO3200000700	Plug, 3/8"	1
3	CO3202001500	Cap, G1/2	1
4	CO2811008600	Washer (10.5 x 18 x 2)	1
5	*Not Available*	Pump Manifold	1
6	CO3200000400	Plug, 1/4"	1
7	*Not Available*	Screw	8
9	*Not Available*	O-Ring	6
10	CO3009014400	Suction/Delivery Valve Seat	6
11	CO3604001700	Suction/Delivery Valve	6
12	CO1802017700	Suction/Delivery Valve Spring	6
13	CO1205004300	Suction/Delivery Valve Cage	6
14	CO3202031600	Valve Plug Kit	6
15	CO1210002100	O-ring (2.62 x 15.54)	6
16	CO0009028900	Anti-Extrusion Ring	6
17	CO0600005400	Special Bolt	3
18	CO2811008200	Washer	3
19	CO0202004200	Ceramic Bushing	3
20	CO2812009400	Washer	3
21	CO1210003900	O-ring (1.78 x 7.66)	3
22	CO0009017000	Anti-Extrusion Ring	3
23	*Not Available*	Piston	3
24	*Not Available*	Gudgeon Pin	3
25	*Not Available*	Connecting Rod Kit	3
26	CO1210039400	O-ring (3.53 x 142.5)	1
27	CO0402035100	Cover	1
28	*Not Available*	Screw	6
29	CO1210004800	O-ring (2.62 x 20.24)	1
30	CO3201002700	Oil Sight Glass	1
31	CO3200000700	Plug, 3/8"	1

Ref #	Part #	Description	Qty
32	CO1210044100	O-ring (2 x 14)	1
33	*Not Available*	Screw	4
34	*Not Available*	Flange	1
35	CO1210044800	O-ring (2 x 70)	1
36	CO0440002800	Roller Bearing	1
37	CO3200007500	Oil Dipstick	1
38	CO0403018600	Crankcase	1
39	CO1602005500	Shaft Key (8 x 7 x 35)	1
40	*Not Available*	Throughshaft	1
41	*Not Available*	Screw	4
42	CO0019003200	Oil Seal (30 x 52 x 7)	1
43	*Not Available*	Flange	1
44	CO0601030400	Spacer (.05)	1
	CO0601030500	Spacer (.10)	1
	CO0601030600	Spacer (.19)	1
	CO0601030700	Spacer (.25)	1
45	CO1210044800	O-Ring	1
46	CO0440002800	Roller Bearing (30 x 62 x 25)	1
47	CO0019012200	Oil Seal (22 x 32 x 7)	3
48	CO1210054700	O-ring (2 x 37)	3
49	CO0009028500	Packing Retainer	3
50	*Not Available*	Packing	3
51	CO0009028400	Packing Retainer	3
52	*Not Available*	Packing	3
60	CO0205007100	Connecting Rod	3
61	*Not Available*	Throughshaft	1
101	CO5019064500	Water Seal Kit	1
102	CO2409011600	Piston Kit "C"	1
103	CO5019064900	Oil Seal Kit	1
104	CO5025002100	Complete Valve Kit	1

Pump Exploded View- NSSHFB7035 (A1572092)

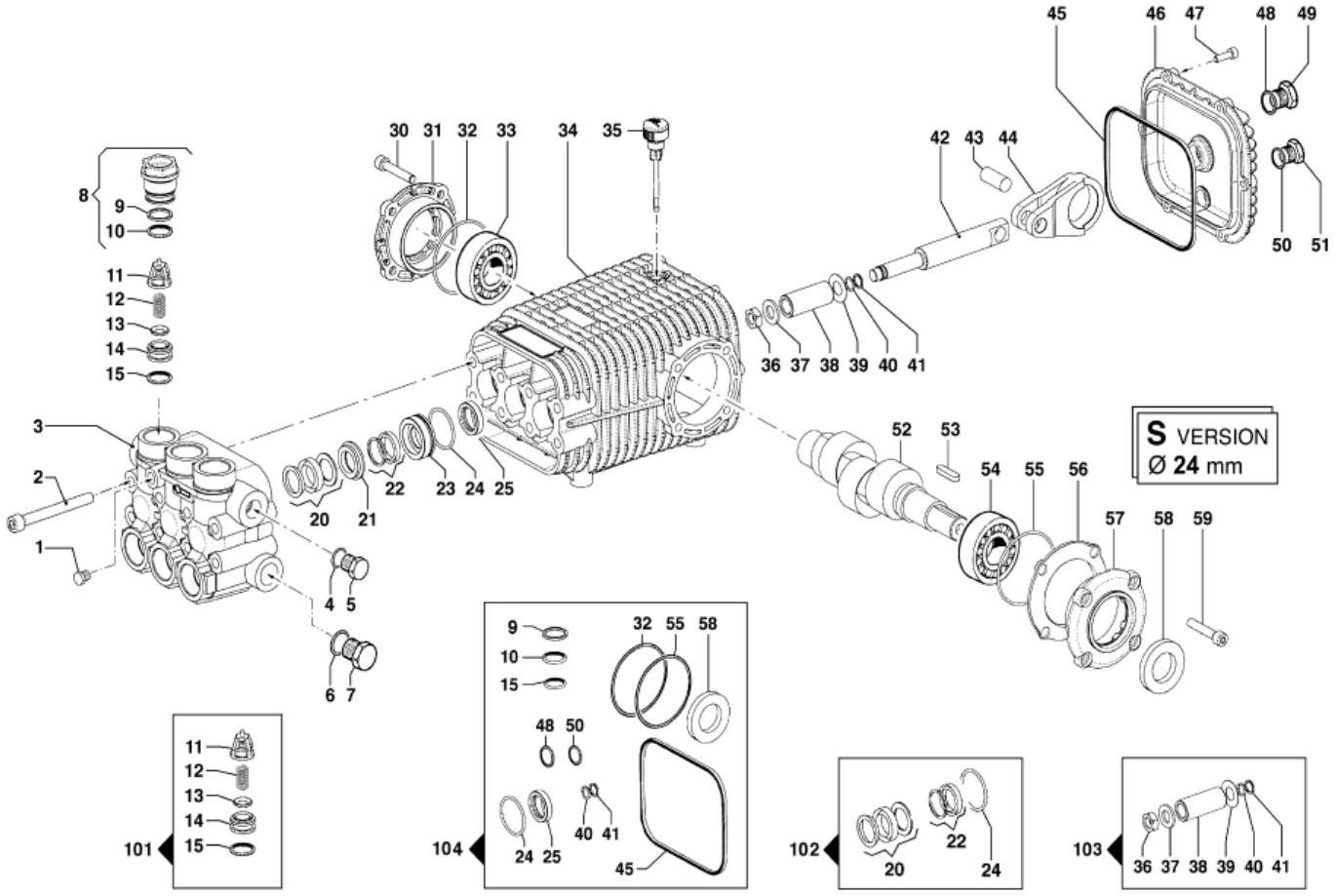

Ref #	Part #	Description	Qty
1	CO3202011200	Plug, 1/4"	1
2	*Not Available*	Screw	8
3	*Not Available*	Pump Manifold	1
4	CO2811008600	Washer (21.2 x 27 x 1.5)	1
5	CO3202001500	Plug, 1/2"	1
6	CO2811007900	Washer (27.7 x 32.5 x 1.5)	1
7	CO3202011500	Plug, 3/4"	1
8	CO3202031700	Valve Plug Kit & O-Ring	6
9	CO0009029000	Anti-Extrusion Ring	6
10	CO1210004800	O-ring (2.62 x 20.54)	6
11	CO1205003800	Suction/Delivery Valve Cage	6
12	CO1802024400	Suction/Delivery Valve Spring	6
13	CO3604003200	Suction/Delivery Valve	6
14	CO3009014500	Suction/Delivery Valve Seat	6
15	CO1210004800	O-ring (2.62 x 20.54)	6
20	*Not Available*	Packing	3
21	CO0009028200	Packing Retainer	3
22	*Not Available*	Packing	3

Ref #	Part #	Description	Qty
38	CO0202004300	Ceramic Bushing	3
39	*Not Available*	Washer	3
40	CO1210017000	O-ring (1.78 x 10.78)	3
41	CO0009022500	Anti-Extrusion Ring	3
42	*Not Available*	Piston	3
43	*Not Available*	Gudgeon Pin	3
44	CO0205007100	Connecting Rod	3
45	CO1210034900	O-ring (3.53 x 142.5)	1
46	*Not Available*	Cover	1
47	CO3609003200	Screw (M6 x 20)	6
48	CO1210004800	O-ring (2.62 x 20.54)	1
49	CO3201002700	Plug, 1/2"	1
50	CO1210044100	O-ring (2 x 14)	1
51	CO3200000700	Plug, 3/8"	1
52	*Not Available*	Throughshaft	1
53	CO1602005500	Key (8 x 7 x 3.5)	1
54	CO0440002800	Roller Bearing (30 x 62 x 25)	1
55	CO1210044800	O-Ring (2 x 70)	1

23	CO0009028300	Packing Retainer	3
24	*Not Available*	O-Ring	3
25	CO0019012200	Oil Seal	3
30	*Not Available*	Screw	4
31	*Not Available*	Flange	1
32	CO1210044800	O-Ring (2 x 70)	1
33	CO0440002800	Roller Bearing (30 x 62 x 25)	1
34	*Not Available*	Pump Crankcase	1
35	CO3200007500	Oil Dipstick	1
36	CO0600006200	Special Bolt	3
37	*Not Available*	Washer	3

56	*Not Available*	Spacer (0.05)	1
		Spacer (0.1)	1
		Spacer (0.19)	1
		Spacer (0.25)	1
57	*Not Available*	Flange	1
58	*Not Available*	Oil Seal	1
59	*Not Available*	Screw	4
101	CO5025002000	Complete Valve Kit	1
102	CO5019064600	Water Seal Kit	1
103	CO2409011400	Piston Kit	1
104	CO5019064400	Oil Seal Kit	1

Limited Warranty

Dear Valued Customer:

The NorthStar Product you just purchased is built with the finest material and craftsmanship. Use this product properly and enjoy the benefits from its high performance. By purchasing a NorthStar product, you show a desire for quality and durability. Like all mechanical equipment this unit requires a due amount of care. Treat this unit like the high quality piece of machinery it is. Neglect and improper handling may impair its performance. Please thoroughly read the instructions and understand the operation before using your product. Always contact NorthStar Product Support at 1-800-270-0810 prior to having any service or warranty work performed, as some services performed by parties other than NorthStar approved service centers may void this warranty. This warranty is in lieu of any other warranty expressed or implied and NorthStar assumes no other responsibility or liability outside that expressed within this warranty.

Limited Warranty

NorthStar shall warranty any piece of equipment manufactured, or parts of equipment manufactured, to be free from defects in material or workmanship for a period of:

NorthStar Product Warranty		
Item #	**Consumer Warranty Period**	**Commercial Warranty Period**
1572081, 1572082, 1572091, 1572092	4 years from date of purchase by user	2 years from date of purchase by user

NorthStar Pump Warranty		
Item #	**Consumer Warranty Period**	**Commercial Warranty Period**
1572081, 1572082, 1572091, 1572092	4 years from date of purchase by user	3 years from date of purchase by user

Engine Warranty		
Item #	**Consumer Warranty Period**	**Commercial Warranty Period**
1572081, 1572082	2 years from date of purchase by user	2 years from date of purchase by user
1572091, 1572092	3 years from date of purchase by user	3 years from date of purchase by user

“Consumer use” means personal residential household use by a consumer. “Commercial use” means all other uses, including use for commercial, income producing or rental purposes or when purchased by a business.

This warranty applies to the original purchaser of the equipment (verification of purchase, in the form of a receipt, is the responsibility of the buyer), is non-transferable, and covers parts and labor. Parts will be replaced or repaired at no charge, except when the equipment has failed due to lack of proper maintenance. If a part is no longer available, the part may be replaced with a similar part of equal function. Any misuse, abuse, alteration or improper installation or operations will void warranty. Determining whether a part is to be replaced or repaired is the sole decision of NorthStar. NorthStar will not provide for replacement of complete products due to defective parts. Any costs incurred due to replacement or repair of items outside of a NorthStar approved facility is the responsibility of the buyer and not covered under warranty. Transportation costs to and from service center is the responsibility of the customer.

In addition to the normal warranty, NorthStar shall warrant any normal wear item from defects in material or workmanship for a period of 90 days from the date of purchase by user. Normal wear items include, but are not limited to, nozzles, quick connect fittings, valves, seals, hoses, springs, O-rings, unloader valves, belts and filter elements.

This warranty specifically excludes the following; failure of parts due to damage caused by accident, fire, flood, windstorm, acts of God, applications not approved by NorthStar in writing, corrosion caused by chemicals, use of replacement parts which do not conform to manufacturer’s specifications, damage to accessory parts such as starting batteries, damage related to rodent and/or insect infestation and damage caused by vandalism. Additional exclusions: loss of running time, inconvenience, loss of income, or loss of use, including any implied warranty of merchantability of fitness for a specific use. Also, Outdoor Power Equipment needs periodic parts and service to perform well, and this warranty does not cover instances when normal use has exhausted the life of a component or the engine.

This warranty does not cover any personal injury or damage to surrounding property caused by failure of any part. Repair or replacement of parts does not extend the warranty period.

The engine warranty is covered under the terms and conditions as outlined by the engine manufactures warranty contained herein and is the sole responsibility of the engine manufacture. Normal engine maintenance such as spark plugs, air filters, adjustments, fuel system cleaning and obstruction due to build up is not covered by this NorthStar warranty.

Please fill in the following information and have it on hand when you call in on a warranty claim.

Customer Number: _____ NorthStar Serial Number: _____

Date of Purchase: _____ Item Number: _____

This page has intentionally been left blank.

Assembled by
Northern Tool & Equipment Company, Inc.
Burnsville, MN 55306
NorthernTool.com